PHA SUPPLEMENTARY REGULATIONS

To the SCCA HillClimb and Time Trial Rules

March 2026

Pennsylvania Hillclimb Association
www.pahillclimb.org

TABLE OF CONTENTS

REVISION HISTORY 6
FOREWORD 8
1. INTRODUCTION 9
1.1 USING THE SUPPLEMENTARY REGULATIONS (SUPPS) 9
1.2 RESERVATION OF RIGHTS 9
2. TERMINOLOGY 10
2.1 SCCA (SPORTS CAR CLUB OF AMERICA, INC.) 10
2.2 TIME TRIALS BOARD (TTB) 10
2.3 TT DIVISIONAL ADMINISTRATOR 10
2.4 TIME TRIALS SAFETY COUNCIL 10
2.5 TT SAFETY STEWARD OF THE DIVISION (TTSS) 10
2.6 CAR (AUTOMOBILE) 10
2.7 CLASS 10
2.8 SANCTION 10
2.9 DRIVER 10
2.10 ENTRANT 10
2.11 PARTICIPANT 10
3. PHA EVENTS 11
3.1 TIME TRIAL 11
3.1.1 COURSES 11
3.1.2 INSTRUCTION 11
3.1.3 DRIVER REQUIREMENTS AND RESPONSILITIES 11
3.1.4 OFFICIALS AND WORKERS 12
3.1.5 GENERAL EVENT GUIDELINES 12
3.2 HILLCLIMB 12
3.2.1 COURSES 12
3.2.2 INSTRUCTION 12
3.2.3 DRIVER REQUIREMENTS AND RESPONSIBILITIES 13
3.2.4 OFFICIALS AND WORKERS 13
3.2.5 GENERAL EVENT GUIDELINES 13
4. EVENT PROCEDURES 14
4.1 PIT AND PADDOCK RULES 14
4.1.1 WORK ON VEHICLES 14
4.1.2 OTHER ACTIVITIES 14
4.2 GRID RULES 14
4.3 THE START 14
4.3.1 STARTER 15
4.3.2 FALSE START 15
4.4 TIMING AND SCORING 15
4.4.1 AWARDS 15
4.4.2 TIES 15
4.4.3 RERUNS 15
4.4.4 PROVISIONAL RESULTS 15
4.4.5 FINISHER 15
4.4.6 MINIMUM NUMBER OF RUNS 15
4.4.7 WINNER 15
4.5 RULES OF THE ROAD 15
4.5.1 DRIVERS' MEETING 15
4.5.2 EMERGENCY PROCEDURES ON COURSE 16
4.5.3 FLAGS 16
4.6 OFFICIAL AND PRACTICE RUNS 16
4.7 USE OF ALCOHOLIC BEVERAGES, NARCOTICS, AND DANGEROUS DRUGS - PROHIBITED 17
4.8 OTHER EVENT PROCEDURES 17
4.8.1 DISQUALIFICATIONS 17
4.8.2 RUNNING OF CLASSES 17
4.8.3 UNMANNED AIRCRAFT SYSTEMS 17
4.8.4 PROTESTS 17
5. EVENT RULES 18
5.1 CLASSIFICATION OF EVENTS 18
5.2 COURSES 18
5.2.1 SELECTION OF COURSES 18
5.2.2 MEASUREMENT OF COURSES 18
5.3 INSURANCE 18
5.3.1 INSURANCE REQUIREMENTS 18

5.3.2 INSURANCE AVAILABILITY 19
5.3.3 COVERAGE AND LIMITS 19
5.3.4 INCREASED LIMITS FOR LICENSED SCCA MEMBERS 19
5.3.5 ALTERNATIVE LIABILITY INSURANCE PROCEDURES FOR EVENTS 20
5.4 SANCTIONS 20
5.4.1 REQUIRED APPROVAL 20
5.4.2 APPLICATION FOR SCCA SANCTION 20
5.4.3 SANCTION PROCEDURES 20
5.4.4 LATE FEE 20
5.5 OFFICIAL SCHEDULE 20
5.6 CHANGES TO THE SUPPLEMENTARY REGULATIONS 20
5.7 ENTRY FORMS 21
5.8 ENTRIES 21
5.8.1 DUAL ENTRY 21
5.8.2 REFUSAL OF ENTRY 21
5.8.3 FALSIFICATION OF ENTRY 21
5.8.4 WITHDRAWAL (SCRATCH) OF ENTRY 21
5.9 SUBMISSION TO RULES 21
5.10 WAIVERS 21
5.11 ENTRY LIST 22
5.12 RESULTS 22
5.13 AWARDS 22
5.14 POSTPONEMENT, ABANDONMENT, OR CANCELLATION 22
5.15 FLAGGING AND COMMUNICATIONS 22
5.15.1 GENERAL ORGANIZATION 22
5.15.2 CENTRAL CONTROL STATION 22
5.15.3 CORNER STATIONS 22
5.16 EMERGENCY SERVICES - MEDICAL AND FIRE SAFETY 23
5.16.1 PURPOSE 23
5.16.2 EMERGENCY SERVICES PERSONNEL AND EQUIPMENT 23
5.16.2.1 MEDICAL PERSONNEL AND AMBULANCE 23
5.16.2.2 COURSE RESPONSE VEHICLE 23
5.16.2.3 WRECKER 23
5.16.2.4 TELEPHONE 23
5.16.2.5 OTHER RECOMMENDED EQUIPMENT 23
5.16.3 Operating Rules 24
5.16.3.1 EMERGENCY PLAN 24
5.16.3.2 BRIEFING 24
5.16.3.3 DISPATCHING 24
5.16.3.4 HOSPITAL ARRANGEMENTS 24
5.16.3.5 IDENTIFICATION OF PERSONNEL 24
5.16.3.6 START OF RACE 24
5.16.3.7 SUSPENSION OF RACING 24
6. LICENSES 25
6.1 LICENSE GRADES 25
6.2 PARTICIPATION REQUIREMENTS 25
6.3 MEDICAL REQUIREMENTS 25
6.4 TIME TRIALS PARTICPATION LOG BOOKS 25
6.5 NOVICE PERMITS 25
6.5.1 NOVICE PERMIT UPGRADES 25
6.5.2 APPLICANTS WITH PRIOR RACING EXPERIENCE 25
6.5.3 RACING ON A TT/PHA NOVICE PERMIT 25
6.5.3.1 NOVICE REGULATIONS 25
6.5.3.2 NOVICE INCIDENTS 26
6.5.4 REVOCATION 26
6.6 HILLCLIMB LICENSE REQUIREMENTS 26
6.6.1 TT NOVICE PERMIT AS TEMPORARY LICENSE 26
6.6.2 RENEWAL OF LICENSE 26
6.6.3 APPLICANTS WITH PRIOR DOCUMENTED EXPERIENCE 26
6.7 OTHER COMPETITION LICENSES - ACCEPTED FOR TIME TRIALS EVENTS 26
6.7.1 ELIGIBILITY 26
6.8 LICENSING OF MINORS 26
6.9 PROBATION LETTER HOLDERS 26
6.10 TIME TRIALS OFFICIALS' LICENSING SPECIALTIES 26
6.10.1 TIME TRIALS OFFICIALS LICENSE LEVELS 27
6.10.2 TIME TRIALS OFFICIALS LICENSE UPGRADE GUIDELINES 27
7. PHA EVENT OFFICIALS 28
7.1 OFFICIALS 28

7.2 RACE OFFICIAL LICENSES ... 28
7.3 REQUIRED OFFICIALS ... 28
7.4 RIGHT TO SUPERVISION ... 28
7.5 APPOINTMENT ... 28
7.6 CONDUCT ... 28
7.6.1 STANDARDS OF BEHAVIOR ... 28
7.6.2 LOSS OF LICENSE ... 28
7.7 PLURALITY OF DUTIES ... 28
7.8 POWERS OF THE SOM – OPTIONAL ... 28
7.9 CHIEF STEWARD ... 29
7.10 EVENT CHAIRMAN ... 29
7.11 CHIEF STARTER - OPTIONAL ... 29
7.12 COURSE CHIEF - OPTIONAL ... 29
7.13 WORKER CHIEF ... 29
7.14 COMMUNICATIONS CHIEF - OPTIONAL ... 29
7.15 CHIEF OF TIMING ... 29
7.16 CHIEF TECHNICAL AND SAFETY INSPECTOR ... 29
7.17 CHIEF OF EMERGENCY SERVICES - OPTIONAL ... 29
7.18 CHIEF DRIVING INSTRUCTOR ... 29
7.19 PRESS OFFICER - OPTIONAL ... 30
7.20 CHIEF REGISTRAR ... 30
7.21 SAFETY STEWARD ... 30
7.22 SOUND CONTROL CHIEF ... 31
7.23 COMPLIANCE CHECKING CREW - OPTIONAL ... 31
8. TECHNICAL & SAFETY INSPECTION ... 32
8.1 FULL INSPECTION ... 32
8.2 REINSPECTION ... 32
8.3 INSPECTION POINTS ... 32
9. AUTOMOBILE & SAFETY ... 34
9.1 CLASSIFICATIONS ... 34
9.1.1 HOMOLOGATION REQUIREMENTS ... 34
9.2 GENERAL PROVISIONS ... 34
9.3 VEHICLE LOGBOOKS ... 34
9.4 FUEL ... 35
9.5 IDENTIFICATION MARKINGS ... 35
9.5.1 NUMBERS AND CLASS LETTERS ... 35
9.5.2 SIZE OF NUMBERS AND CLASS LETTERS ... 35
9.6 MECHANICAL CONDITION ... 35
9.6.1 ALTERATIONS OR DAMAGE AFTER INSPECTION ... 35
9.7 LOSS OF BODYWORK ... 35
9.8 WEIGHT ... 35
9.8.1 BALLAST ... 35
9.9 NOISE ... 36
9.10 BATTERIES ... 36
9.11 FUEL CELLS ... 36
9.12 AERODYNAMIC SKIRTS ... 36
9.13 ACCUMULATORS (E.G., ACCUSUMPS) ... 36
9.14 TRACK ... 36
9.15 WHEEL RIM WIDTH ... 36
9.16 LIGHTS - BRAKE AND TAIL ... 36
9.17 VENTILATION ... 36
9.18 FIREWALL AND FLOOR ... 36
9.19 FIRE SYSTEM ... 36
9.20 REQUIRED DRIVER SAFETY EQUIPMENT ... 37
9.21 SCATTERSHIELDS/CHAIN GUARDS ... 37
9.22 DETACHABLE PANELS/SUNROOFS ... 38
9.23 OIL CATCH TANKS, FILTERS, AND BREATHERS ... 38
9.24 MASTER SWITCH ... 38
9.25 STEERING WHEEL LOCKS ... 38
9.26 FORMULA CAR VISIBILITY ... 38
9.27 WINDOW SAFETY NETS/ ARM RESTRAINTS ... 38
9.28 TOWING EYES ... 39
9.29 WHEEL FANS ... 39
9.30 WINDSHIELD CLIPS/REAR WINDOW STRAPS ... 39
9.31 FUEL AND OIL LINES ... 39
9.32 DATA COLLECTION DEVICES ... 39
9.33 OIL AND OIL ADDITIVES ... 39
9.34 COOLANT ... 39

9.35 CRYOGENIC TREATMENT 39
9.36 AUTOMATIC TRANSMISSIONS AND HAND CONTROLS 39
9.37 CAR ELIGIBILITY 40
9.38 SUPPLEMENTAL CLASSES 40
9.38.1 VINTAGE/HISTORIC: 40
9.38.2 RALLY 40
9.38.3 SPECIAL CLASSES 41
9.38.4 INEX CLASSES (IS & IM) 41
9.38.5 FORMULA V CHALLENG CUP (FVCC) 41
9.38.6 SOLO V 42
9.38.7 OPTIONAL FORMULA CLASSES (Club Ford - CF) 42
9.38.8 STREET MODIFIED REAR WHEEL DRIVE (SMR) 42
9.38.9 MODIFIED ELECTRIC (ME1 & ME2) 42
9.38.10 STOCK ELECTRIC (SE) 42
9.39 SOLO AND TIME TRIAL DERIVED CLASSES 43
9.39.1 SPORT LITE (~~SL~~**ST**) 43
9.39.2 SPORT (S) 43
9.39.3 SUPER SPORT (SS) 43
9.39.4 SPORT MAX (SX) 43
9.39.5 SPORT UNLIMITED (SU) 44
9.39.6 MODIFIED (M) 44
9.39.7 SUPER MODIFIED (SM) 44
9.39.8 OUTLAW (O) 44
10. ROLL BAR / CAGE 45
10.1 PHA EVENTS (Time Trial and Hillclimb) 45
10.1.1 BREAKOUT TIMES 45
10.1.2 CARS WITH NON-MANUFACTURER ENGINE SWAPS 45
10.1.3 VINTAGE AND HISTORIC CLASSES 45
10.1.3 CLASSES NOT OTHERWISE LISTED 45
10.2 BASIC DESIGN CONSIDERATIONS 46
10.3 MATERIAL 46
10.4 FABRICATION 46
10.5 BRACING 47
10.6 MOUNTING PLATES 47
10.7 REMOVABLE ROLL BARS 48
10.8 INSTALLATION ON CARS OF SPACE FRAME AND FRAMELESS DESIGN 48
10.9 OTHER ROLL BAR DESIGNS (ACCEPTABLE FOR CARS BUILT PRIOR TO 1/1/79) 48
10.10 ROLL BAR PADDING 48
11. DRIVER RESTRAINTS 49
11.1 RESTRAINT REQUIREMENTS 49

REVISION HISTORY

Version	Revision Date	Revision Description
2021.1	Dec 30, 2020	Added Revision History section; Added Street Modified Rear (SMR) class; Updated Solo V to be based on C Modified Solo class (was F Modified); Updated wording of roll cage requirements for Street Modified classes for clarity and added SMR to list of SM classes for roll cage rules.
2022.1	Feb 5, 2022	Added “Hillclimb” to “Time Trial Rules” on title page: Updated novice touring run procedure; Added SCCA Hillclimb Safety Rules requirements for fire extinguisher location and for full face helmet and face shield requirements when not behind a DOT windshield; Replaced “recommended” with “**STRONGLY RECOMMENDED**”: Updated GCR classes; Added statement about IT ineligibility for SP; and removed the SCCA Rule Book for Rally. Aligned Super Production specifications with that of other SCCA Regions. [9.36] Added “while seated” to the fire extinguisher location requirement and provided for exceptions. [9.19] Added requirement for balaclavas with open face helmets and for tucking balaclavas into the collar of the driver’s suit. [9.20 E] Added a statement about eyeglasses and safety glasses not qualified as goggles. [9.20 F] Added additional GCR classes to the roll cage requirement (excluding B-Spec and T2-T4) and updated the Street Mod reference from “same brand” to “same manufacturer” regarding roll/bar/cage requirements. [10.1]
2022.2	Mar 5, 2022	Updated the protest procedure in compliance with SCCA Time Trials Added a grid for open/closed car, DOT/not DOT windshield and full face/open face helmet for requirements for eye protection (face shields and goggles). [9.20.F] Added a statement for arm restraints to follow manufacturer instructions the restriction of wrist and hands. [9.27] Added a new requirement for roll cages based on breakout times. [10.1.1] Added a 2023 requirement for fuel cells for specific GCR classes in compliance with the GCR specifications. [9.11] Added a 2023 requirement for full face helmets for all drivers with the exception of SA2020 open face helmets purchased before 03/05/22 and the car has a DOT approved windshield. [9.20.B] Added a 2023 requirement for head and neck support systems (SFI 38.1 or FIA 8858-2010) for all drivers. [9.20.B] Added a 2023 requirement for fuel cells for SMX classes in compliance with the GCR specifications. [9.37.6]
2023.1	Nov 12, 2022	Changed requirement date for head and neck support systems to 2024 [9.20.B] Changed cage requirements due to breakout times to be for Hillclimb events only. Track events are exempted. [10.1.1]
2023.2	Jan 21, 2023	Added guidance for exemptions to exhaust system termination [8.3.G]; Modified roll cage requirement for Street Modified cars with a cross manufacturer engine swap. [10.1] Reviewed breakout times for 2023 with result that no change from 2022 is required. [10.1.1] Per GCR the national class F5 (F500) has been replaced by F6 and the national class T5 has been added. [9.36]

Version	Revision Date	Revision Description
2023.3	Mar 11, 2023	Froze Street Prepared vehicle classing to 2022 SCCA Solo Rules. Street Prepared vehicle preparation shall adhere to 2023 SCCA Solo Rules. [9.36] Note: a PHA committee has been formed to develop a future PHA specific vehicle classing structure for Street Prepared. Added SCCA Hillclimb Rule requirement for one-piece, bucket-type race seat. [8.3.I] Modified Roll Bar / Cage tubing size requirements to include SCCA Hillclimb Rules that exceeded PHA requirements [10.3.B]
2024.1	Feb 18, 2024	Added C-Spec to list of classes that don't need a fuel cell [9.11] Updated wording for head and neck restraints as one is now required [9.20, item B.2] Updated GCR class listing to 2024 (current) GCR classes [9.37] Updating wording for Street Prepared vehicle classing. It continues to be frozen to 2022 SCCA Solo Rues, but vehicle preparation shall adhere to the 2024 (current) SCCA Solo Rules [9.37] Removed references to the TTR for Special Classes [9.38.3] Added roll cage and body panel requirements for Special Classes [9.38.3, Item E] Added note on cage requirements for Vette/Miata Karts and other similar type builds [10.1] Corrected typo in Roll Cage Tubing specs for 1501lbs to 2699lbs – the first line is 1.500 x 0.095, not 1.500 x 0.120 [10.3]
2024.2	Mar 9, 2024	Updated wording for head and neck restraints to clarify how devices with expiration dates will be handled. Also added FIA 8858-2002 to list of accepted certifications. [9.20, item B.2]
2025.1	Jan 14, 2025	Updated GCR class listing to 2025 (current) GCR classes [9.37]
2025.2	Jan 30, 2025	Replaced Solo Street Prepared and Street Modified classes and SMX with new Solo and Time Trial Derived Classes [9.1 – B], [9.37], [9.38] Updated exhaust requirements: replace SMX with Outlaw [8.3 – G] Updated fuel requirements: replace Solo classes with Solo and Time Trial Derived Classes [9.4–A] Updated roll cage requirements – replace SMX with Outlaw, replace SSM, SM (Street Modified), SMF with SX, SU, M, SM (Super Modified) [10.1]
2025.3	Nov 12, 2025	Added text to Compliance Queries / Protests to clarify the intent [4.8.4]
2026.1	**Mar 2, 2026**	**Added language on time interval before rerun [4.4.3]** **Modified exhaust requirements to align with AHS classing [8.3 – G]** **Modified classes allowed non-metallic chassis construction to reference GCR instead of listing specific GCR classes [8.3 – V]** **Extended the exemption for open face helmets by one year [9.20 – B.1]** **Update language on Head and Neck Restraint system to match policy in GCR [9.20 – B.2]** **Added language to clarify towing eye design [9.28]** **Added section on coolant [9.34]** **The abbreviation for Sport Lite was changed from SL to ST [9.37, 9.39]** **Added note for production vehicles that remove majority of exterior panels or are converted to a "Kart" to Solo and Time Trial Derived Classes; Added additional eligible Solo classes and reworded to align with AHS classing [9.39]** **Clarified language on roll cage requirement for cars with a non-manufacturer swapped engine, and moved to separate titled section [10.1.2]**

FOREWORD

These Supplementary Regulations (SUPPS) are intended to assist in the orderly conduct of PHA events and to further participant and spectator safety. They are a guide and are in no way a guarantee against injury or death to participants, spectators, or others. No express or implied warranties of safety or fitness for a particular purpose shall be intended or result from publication of or compliance with these rules.

Participants that are new to the PHA Program are strongly encouraged to read Section 3 first as it contains a summary of the critical points helpful in guiding a new participant.

Effective January 1st, of each year, all editions of the Supplementary Regulations are superseded by the current edition.

All dimensions are in inches unless otherwise noted.

The masculine pronouns he, him and his will be used generically, without actual reference to gender.

1. INTRODUCTION

These rules shall govern any event that is part of the PHA Championship Series.

1.1 USING THE SUPPLEMENTARY REGULATIONS (SUPPS)

Any rules found in the Supplementary Regulations (SUPPS) shall take precedence over the SCCA's General Competition Rules (GCR) and/or Time Trial Rules at PHA Time Trial/Hillclimb events. The SUPPS are intended to expand upon the SCCA Time Trial Rules and the SCCA Hillclimb Rules.

For specifications for particular classes or automobiles, please refer to the following:

- For any SCCA Club Racing Class, refer to the current GCR Specification Book.
- For any Solo and Time Trial Derived classes, refer to these Supplementary Regulations, specifically section 9.39.
- For any other class, refer to these Supplementary Regulations, specifically section 9.38.

Note: Please remember that in areas where the Supplementary Regulations conflict with other preparation rules, the SUPPS take precedence. All safety items discussed in the SUPPS are specified as the minimum, and preparation may exceed these rules if class rules allow.

A. If circumstances create a situation where a rule clarification or change is found necessary to be implemented immediately, the PHA Board may issue a memorandum stating the change and its effective date. Those memorandums will be posted on the PHA website. Effective on January 1 of each year, all previous editions of the Supplementary Regulations will be superseded by the current edition.

B. The SUPPS shall not be given a strained or tortured interpretation and shall be applied in a logical manner, keeping in mind that it cannot specifically cover all possible situations. The word "shall" (either positive "shall" or negative "shall not") is mandatory. The word "may" is permissive. If there is a conflict between the SUPPS and a Specification Book (PCS, GTCS, TCS, SSS, ITCS, SRCS, FCS) the SUPPS has precedence over the Specification Book. If an item is not addressed in the Specification Book, then the item is controlled by the SUPPS.

C. The interpretation and application of the Supplementary Regulations by SCCA officials shall be final and binding. In order to promote the sport of automobile competition, to achieve prompt finality in competition results, and in consideration of the numerous benefits to them, all members, including competitors and officials, expressly agree that:

1. DETERMINATIONS BY SCCA OFFICIALS ARE NON-LITIGABLE.
2. THEY WILL NOT INITIATE OR MAINTAIN LITIGATION OF ANY KIND AGAINST SCCA OR ANYONE ACTING ON BEHALF OF SCCA TO REVERSE OR MODIFY SUCH DETERMINATIONS, OR SEEK TO RECOVER DAMAGES OR OTHER RELIEF ALLEGEDLY INCURRED OR REQUIRED AS A RESULT OF SUCH DETERMINATION; AND
3. IF A MEMBER, COMPETITOR, OR OFFICIAL INITIATES OR MAINTAINS LITIGATION IN VIOLATION OF THIS PROVISION, THAT MEMBER, COMPETITOR, OR OFFICIAL AGREES TO REIMBURSE SCCA FOR ALL COSTS OF SUCH LITIGATION, INCLUDING TRAVEL EXPENSES AND ATTORNEYS' FEES.

1.2 RESERVATION OF RIGHTS

SCCA is a private, not for profit organization. It reserves the right to deny the issuance of any license, or to revoke any license previously issued, for any reason or no reason, except that it will not deny or revoke a license solely on the basis of race, creed, color, sex, or national origin.

2. TERMINOLOGY

The following nomenclature, definitions, and abbreviations shall be used in the SUPPS, all Supplemental Regulations and Entry Forms, and for general use.

2.1 SCCA (SPORTS CAR CLUB OF AMERICA, INC.)

A not-for-profit organization, incorporated within the state of Connecticut, dedicated to the ownership, operation, and preservation of sports cars, and the arrangement and regulation of sports car events and exhibitions, the encouragement of safe and sportsmanlike conduct on public highways, and the development of technical information relevant to any of these purposes. The SCCA is delegated the authority to sanction FIA listed events by ACCUS FIA. The address of SCCA is:

Sports Car Club of America, Inc.
Experiential Programs
6620 SE Dwight St
Topeka, Kansas 66619
(800) 770-2055
www.scca.com

2.2 TIME TRIALS BOARD (TTB)

The TTB shall consist of a total of 3-4 SCCA members selected by the Director of Experiential Programs and approved by the Board of Directors who operate with a strategic view of the time trial program. Responsibilities include the promotion, marketing and growth for the TT programs and the implementation of proposed rule changes for all levels of time trial events. All proposed rule language is to be developed and approved by the TTB and the Director of Experiential Programs before submission to the Board of Directors. TTB members are tasked to explore the development of a National Time Trial Competition Program. The exploration process should address the formation of a national rules package (kept separate from divisional TT rules), the web presence, and the marketing required for implementation. If and when a national program is accepted, this committee would oversee the implementation of the program.

2.3 TT DIVISIONAL ADMINISTRATOR

The individual designated by the Division to supervise and administer SCCA policies and standards for designated classes of events and to train SCCA Stewards within each Division and who coordinates with the DTTC Representative(s). The TT Divisional Administrator has authority to approve Time Trials Officials Licenses and upgrades for TT Driver Licenses. Term of office is three years.

2.4 TIME TRIALS SAFETY COUNCIL

The purpose of the Time Trials Safety Council (TTSC) shall be to advise the DTTC on matters of safety. This council shall be made up of representatives from Divisions which have active Time Trials programs by the TT Safety Steward of the Division.

2.5 TT SAFETY STEWARD OF THE DIVISION (TTSS)

The individual selected by the Division to supervise events to ensure adherence to all SCCA safety rules and guidelines, to train SCCA TT Safety Stewards within each Division and coordinates with the TT Divisional Administrator and DTTC Representative(s). Term of office is three years.

2.6 CAR (AUTOMOBILE)

A self-propelled land vehicle running on four wheels, not in a line, which shall be in contact with the ground. At least two (2) wheels shall affect the steering and at least two (2) the propulsion.

2.7 CLASS

A group of cars, classified according to the provisions of the SUPPS.

2.8 SANCTION

The documentary authority, granted by the SCCA, to organize and hold a competition.

2.9 DRIVER

A person named as the driver of a car in any PHA event. Also, any person who drives a race car in any PHA Event whether or not properly registered, entered, or named as the driver.

2.10 ENTRANT

A person whose entry is accepted for any PHA Event. The signature on an entry form and the membership number shall be that of an individual SCCA member.

2.11 PARTICIPANT

Any person signing an SCCA Participant Agreement (waiver of liability) including all organizers, entrants, drivers, crew, officials, members, workers, and all guests of the above, and any SCCA member in attendance is a participant.

3. PHA EVENTS

3.1 TIME TRIAL

Time Trial events are based on competition and utilize fixed racing circuits (approved by the National Office) and other temporary courses (airports, large lots, etc.). Care should be taken to offer some basic instruction for novice drivers.

3.1.1 COURSES

Courses for Time Trial events should be chosen to provide a safe and fun environment in which to compete. Tracks that reward proper car handling should be chosen. It is not recommended that Cones or other items be used to create false obstacles to slow cars down that are at speed.

A. Course maps should be available to all participants and officials, and marked to indicate the following:

1. Passing Zones (if used) must be clearly labeled
2. Any cones or temporary barriers
3. Pit location along with pit in and out
4. Flag and observation stations

B. Flag stations and observation points must be placed to provide complete, continuous coverage of all parts of the course (overlapping coverage is recommended). They must be manned by at least one person. All stations must be provided with a method of communication to the chief steward AT ALL TIMES.

3.1.2 INSTRUCTION

Time Trial events should provide some instruction in driving techniques if required or requested. If the event does not allow Novices, this section is waived. The following rules shall apply to instructors and instruction practices:

A. The Chief Driving Instructor must be an SCCA member. This person shall hold a Time Trials Driving Instructor license and should have experience in Driving Instruction in some form. It is suggested that the Chief Driving Instructor not be assigned students so that he may oversee the event instruction as a whole.

B. It is recommended that Driver Observers be used at various parts of the course to observe all Novice drivers. Corner Station personnel may be used for this purpose, so long as they are informed of their responsibility and agree to act in such a capacity.

C. Novice Permits must be collected at Registration. They will be available from the Chief Steward (or designee) at the end of the event.

3.1.3 DRIVER REQUIREMENTS AND RESPONSILITIES

Drivers are required to:

A. Have a current SCCA membership.

B. Have a valid, state issued, full privilege driver's license.

C. Present a TT or Hillclimb License or Novice Permit, Club Racing Competition License, Club Racing Novice Competition Permit, or competition license recognized by the SCCA at events. All Novices must present their Novice Permit at registration, and it will be returned with any notations at the end of the event. Drivers with Time Trials or Hillclimb Licenses or higher must present their SCCA membership and license at registration.

D. Dress appropriately. Protective apparel must meet the specifications set forth in SUPPS Section 9.20.

E. Drive a vehicle which meets the inspection required in SUPPS Section 8. Roll bar requirements are listed in SUPPS Section 10.

F. Immediately return to the pits if directed to by flaggers or other Officials.

G. Follow all event rules as listed in the Supplementary Regulations for the event.

H. Refrain from passing unless given a point-by in a designated passing area. The overtaking car is responsible for safely moving around the car being overtaken after being given a point by.

I. Be aware of other drivers and use point-by techniques to yield to faster cars (if used). The car being overtaken shall hold their position while being passed.

3.1.4 OFFICIALS AND WORKERS

The following Officials and Workers are required at events as a minimum.

A. Operating Officials required are Chief Steward, Chief Driving Instructor, Chief Technical and Safety Inspector, and Safety Steward. Each of these officials must be a current SCCA member and hold a valid license in that specialty. Standard grade licenses are the minimum required for each of these Officials. Any substitution of officials shall be coordinated with the Chief Steward and other officials.

B. Workers to man each flag or observation station. There should also be at least one pit worker (in addition to a flagger if present at the pits) to direct drivers on course and communicate with drivers in the pits. Drivers may be used to man these stations when not on track.

3.1.5 GENERAL EVENT GUIDELINES

All event rules should be reviewed with all participants at the beginning of each day of the event.

A. Any flags or other communication signals for drivers should be reviewed before any track time commences.

B. Run groups should be separated by potential vehicle performance. In the case where open wheeled cars are permitted to run, they shall NOT be on track with any closed-wheel vehicles other than Sports Racer type cars. Exceptions to this may be made by agreement of both the Safety Steward and Chief Steward.

C. If pylons are used, some form of penalty may be used if a competitor displaces a pylon. In this case, pylon position must be clearly marked, typically with a wide, light-colored line that outlines the base.

D. If passing zones are used, they should be clearly marked to be discernable at speed. Passing procedures should be clearly detailed in the Supplementary Regulations for the event or series.

E. Items such as schedule, session procedures, and work requirements are at the discretion of the Region holding the event and shall be listed in the Event Supplementary Regulations.

F. All PHA events must be sanctioned in accordance with the current SCCA Event Sanction Form.

3.2 HILLCLIMB

Hillclimb events are based on competition on courses that are not suitable for Time Trials events. These may include hillclimbs, or other events on approved courses. Care should be taken to offer some basic instruction for novice drivers.

3.2.1 COURSES

Courses for Hillclimb events should be composed as to provide for safety despite possible hazards. Every reasonable effort should be taken to eliminate or reduce hazards if they are present, but competitors should be aware that Hillclimb events may present hazards that exceed those found at Time Trials events. Cones or other items are not usually used to create false obstacles. Contact the TT Program Manager at the SCCA National Office regarding any questions on Hillclimb courses.

A. Course maps should be available to all participants and should be marked to indicate pit location along with pit in and out (if used), flag and observation stations, and finish shutdown areas.

B. Flag stations and observations points must be placed to provide complete continuous coverage of all parts of the course (all parts of the course should be viewable from one or more corner stations). They must be manned by at least one person. All stations must be provided with a method of communication to the Chief Steward at all times.

3.2.2 INSTRUCTION

Hillclimb events should provide some instruction in driving techniques if required or requested. If the event does not allow Novices, this section is waived. The following rules shall apply to instructors and instruction practices:

A. The Chief Driving Instructor must be an SCCA member. This person shall hold a Time Trials Competition license or higher and should have experience in Driving Instruction in some form.

B. It is recommended that Driver Observers be used at various parts of the course to observe all Novice drivers. Corner Station personnel may be used for this purpose, so long as they are informed of their responsibility and agree to act in such a capacity.

C. Novice Permits must be collected at Registration. They will be available from the Chief Steward (or designee) at the end of the event.

3.2.3 DRIVER REQUIREMENTS AND RESPONSIBILITIES

Drivers are required to:

A. Have current SCCA membership.

B. Have a valid, state issued, full privilege driver's license.

C. Present a TT or Hillclimb License or Novice Permit, Club Racing Competition License, Club Racing Novice Competition Permit, or competition licenses recognized by the SCCA at events. All Novices must present their Novice Permit at registration, and it will be returned with any notations at the end of the event. Drivers with Time Trials or Hillclimb Licenses or higher must present their SCCA membership and license at registration.

D. Dress appropriately. Protective apparel must meet the specifications set forth in SUPPS Section 9.20.

E. Drive a vehicle which meets the inspection required in SUPPS Section 8. Roll bar requirements are listed in SUPPS Section 10.

F. Immediately return to the pits if directed to by flaggers or other Officials.

G. Follow all event rules as listed in the Supplementary Regulations for the event.

3.2.4 OFFICIALS AND WORKERS

The following Officials and Workers are required at events as a minimum.

A. Operating Officials required are Chief Steward, Chief Driving Instructor (waived if the event is restricted to not include Novices), Chief Technical and Safety Inspector, and Safety Steward. Each of these officials must be a current SCCA member and hold a valid license in that specialty. Official grade licenses are the minimum required for each of these Officials. Any substitution of officials shall be coordinated with the Chief Steward and other officials.

B. Workers to man each flag or observation station. There should also be at least one pit worker (in addition to a flagger if present at the pits) to direct drivers on course and communicate with drivers in the pits.

3.2.5 GENERAL EVENT GUIDELINES

All event rules should be reviewed with all participants at the beginning of each day of the event.

A. Any flags or other communication signals for drivers should be reviewed before any track time commences.

B. Run groups should be separated by potential vehicle performance. In the case where open wheeled cars are permitted to run, they shall NOT be on track with any closed-wheel vehicles other than Sports Racer type cars.

C. Items such as schedule, session procedures, and work requirements are at the discretion of the Region holding the event and shall be listed in the Supplementary Regulations.

D. All Hillclimb events must be sanctioned in accordance with the current SCCA Sanction Form.

4. EVENT PROCEDURES

The following standards apply to all PHA events.

4.1 PIT AND PADDOCK RULES

For the purposes of Time Trials events, the terms Pit and Paddock shall be interchangeable, and shall be defined as the area reserved for the parking of or working on participating automobiles. At PHA events, these areas shall be defined as “cold” areas, and as such, be open to spectators (if applicable) unless otherwise restricted in the Supplemental Regulations for an event. No alcoholic beverages are permitted in the pit area during hours of competition. Failure to comply will result in disqualification.

4.1.1 WORK ON VEHICLES

The following rules apply to working on vehicles in the Pit/Paddock:

A. Cars shall not be run in gear with the drive wheels off the ground.

B. Jack stands must be used whenever any person is under any part of a lifted vehicle.

C. All vehicles must be securely held in place via chock, stand, or other positive method whenever the driver is not seated in the driver’s seat.

D. Any compressed gas cylinders with pressures above 200 psi must have a cage or similar device to protect the valve/regulator/gauge assembly when rigged for use.

4.1.2 OTHER ACTIVITIES

A. No motorized vehicle may be operated by anyone not holding a valid state-issued driver’s license before, during and after the event.

B. Any pets must be securely fastened to a leash or chain not to exceed 20 feet. This leash or chain must be securely held by a stationary object or must be controlled by an adult at all times.

C. All minors shall be under adult supervision at all times.

D. No person may ride on the external bodywork of any vehicle in the Pit/Paddock.

E. All drivers are expected to display patience and courtesy. Cars will return to the pits on the racecourse and must slow down when exiting the racecourse into the pits.

F. BE AWARE AT ALL TIMES FOR FOOT TRAFFIC IN THE PITS.

4.2 GRID RULES

Grid shall be defined as the area where vehicles are staged and readied for the start. This area shall be a “hot” area by definition and personnel access shall be restricted as such.

1. GRID SHALL BE RESTRICTED TO ONLY THOSE VEHICLES WHICH ARE BEING READIED TO START.
2. NO VEHICLE SHALL CARRY PASSENGERS ON THE GRID.
3. NO TIRE-WARMERS ARE PERMITTED ON GRID.
4. VEHICLES ON GRID MAY NOT BE JACKED OR LIFTED WITHOUT SPECIFIC PERMISSION FROM THE CHIEF STEWARD.
5. NO AUTOMOBILE MAY BE PUSH-STARTED ON GRID WITHOUT SPECIFIC PERMISSION FROM THE CHIEF OF GRID.

4.3 THE START

The flying start shall be the standard in all PHA events, where the start timer is triggered once the car is already in motion. LeMans starts are forbidden in all cases.

The warm-up lap (if used) shall start from re-entry. Single lap timed runs shall be started at the end of the specified warm-up lap with a waving green flag and end with a checkered flag. Continuous lap timed runs shall be started at the end of the specified warm-up lap with a waving green flag. A standing green flag shall indicate the start of the following timed runs. A checkered flag shall indicate the end of the last timed run. If more than two consecutive timed runs are allowed, the starter should indicate, along with the standing green flag, the number of the lap being started. If timing fails to record the start or end of a timed run, additional green flags may be given to allow the driver to continue. However, the driver may elect to pit and take a later rerun. Cool-down laps may be used only if necessary (due to course configuration or position of timing).

Standard Start (practice)

One or more no passing yellow flags or other indication should be given at the beginning of each practice session. This procedure is highly recommended for the first session of each run group on each day of an event.

4.3.1 STARTER

For hillclimb and acceleration runs a driver shall be considered as having started if he crosses the control line at the start.

For time trials at tracks (or other courses where laps are used), once a car enters the course, that run is considered started, even though the starting line may not have been crossed.

4.3.2 FALSE START

A false start occurs when the driver crosses the timing line at the start before being instructed to do so by the starter or by a visual starting indicator or enters the course before being instructed to do so. The penalty for a false start shall be a “Did Not Finish” (DNF).

4.4 TIMING AND SCORING

It is highly recommended that timing in all PHA Events be at least 1/100 second intervals. Electrical timing devices backed by two independent timing devices are highly recommended. Automatically actuated timers are recommended as the primary means of timing.

4.4.1 AWARDS

Awards shall be based on the single best recorded run. 1st through 3rd event plates will be awarded for 1st through 3rd place in each class; all other entrants will receive an event participant plate.

4.4.2 TIES

In the case of tied times for FTD or class awards, one of the following options will be selected at the discretion of the event organizer: both drivers will be awarded the win; the second fastest run will be used to break the tie; or the tied drivers may be afforded an additional run to break the tie.

4.4.3 RERUNS

Reruns shall not be given due to vehicle mechanical failure. However, during continuous timed runs, if the driver raises his hand before the start line, he shall not be counted as having started that timed run and may complete his remaining timed runs on a rerun.

A mandatory five-minute waiting period from the time a vehicle returns to the start grid must be observed before any rerun is permitted. This interval is required to ensure that all competitors face fair and consistent conditions during their rerun attempt.

4.4.4 PROVISIONAL RESULTS

Provisional results shall be made available to drivers as soon as possible.

4.4.5 FINISHER

To be considered a finisher, a car must receive a time that can be used in scoring and complete the course under its own power.

4.4.6 MINIMUM NUMBER OF RUNS

Each contestant should receive a minimum of the opportunity for two timed runs.

4.4.7 WINNER

The winner shall be the competitor who covers the prescribed distance of the competition in the least time, subject to penalties for course deviations or displacement of course markers.

4.5 RULES OF THE ROAD

The following standards apply to all PHA events.

4.5.1 DRIVERS′ MEETING

There shall be a drivers’ meeting each day of the event. Attendance at the Driver's Meeting is mandatory each day, failure to attend may result in the loss of timed runs. At each meeting a Steward must cover at least the following:

A. The meaning of flag signals and flagging procedures

B. The location of black flag station (if used) and where to report if black flagged

C. Any designated passing zones and all passing procedures

D. Other Rules of the Road, Supplementary Regulations, etc. as necessary

E. Penalty procedures for violation of rules. Penalties for violation of rules may be disqualification, additional training or schooling, or other appropriate penalties such as the Stewards may devise. Repeated or flagrant violations and illegal passing shall result in disqualification and may result in revocation of the driver’s Time Trials or Hillclimb license.

4.5.2 EMERGENCY PROCEDURES ON COURSE

During an event, it is expressly forbidden to drive or tow a car at any time or under any conditions in a direction opposite to that in which the event is being run without the specific approval of the Safety Steward. Infraction of this rule may mean immediate disqualification.

If for any reason a driver is forced to stop his car on the course during an event, it should be his first duty to place his car in such a manner as to cause no danger or obstruction to other competitors.

Drivers may obtain no assistance during the run other than from their pit crews and in the pits. This does not preclude assistance by event officials for safety reasons.

Cars may not be pushed or moved under power of the starting device while on the course, except to remove them from a hazardous position to one of greater safety.

4.5.3 FLAGS

Flags and their meaning shall be discussed at every Drivers Meeting. The following flags may be used at PHA events:

RED FLAG (SOLID RED)

Displayed at each station and on the Starter's stand – EXTREME DANGER – THE SESSION HAS BEEN STOPPED. Come to an immediate, controlled stop at the side of the race track (preferably before and within sight of a staffed station or where specified in the event Supplemental Regulations). When released by an official, proceed cautiously to the pits. Once a red flag has been displayed, it will not be withdrawn until all cars have come to a stop.

NOTE: THE RED FLAG CAN ONLY BE DISPLAYED BY ORDER OF THE CHIEF STEWARD AS RELAYED THROUGH RACE CONTROL.

GREEN FLAG (SOLID GREEN)

When displayed, the green flag indicates that the course is clear, and the event is underway. The green flag is ordinarily shown only by the Starter.

YELLOW FLAG (SOLID YELLOW)

STANDING YELLOW– Take care, Danger, Slow Down, NO PASSING FROM THE FLAG until past the emergency area.

WAVED– Great Danger, Slow Down, be prepared to stop – NO PASSING FROM THE FLAG until past the emergency area.

NOTE: A driver may encounter several flags before reaching the emergency area. The requirements are still the same: SLOW DOWN, NO PASSING.

CHECKERED FLAG (BLACK AND WHITE CHECKS)

Displayed at Finish to indicate that the session is finished. Continue cautiously to the pits.

This flag is optional at the discretion of the Event Steward and may be replaced by a prominent sign, preferably a banner across the course, indicating the finish line.

MANDATORY SHUT DOWN IS REQUIRED IMMEDIATELY AFTER THE FINISH LINE (except for track events).

4.6 OFFICIAL AND PRACTICE RUNS

A. All drivers must be given a reasonable opportunity to start the same number of unobstructed official runs. A run disrupted by display of a red or yellow flag shall normally entitle the driver to a re-run.

B. If the timing mechanism fails, the driver shall be red-flagged at the earliest opportunity and provided an opportunity for an additional run as soon as possible. At Time Trials events on closed courses, if the timing mechanism fails, the driver may be allowed to continue without being red-flagged.

C. Organizers of PHA Events shall not allow cars to make timed runs unless both the car and driver conform fully to all safety requirements applying to such events. This shall not preclude exhibition and touring runs by historic or other vehicles, but such runs shall not be timed, and the speeds allowed shall not exceed those that would be legal, reasonable, and prudent if the course were a public highway.

D. Competitors may be given instructional tours of the course with the approval and oversight of the Chief Safety Steward, Chief Steward and Chief Driving Instructor. Media or local celebrities may be given access to the course if they are seated in a passenger seat with the appropriate safety gear on, are belted in, and their "tour" of the course is approved in advance by the Safety Steward, Chief Steward and Chief Driving Instructor.

4.7 USE OF ALCOHOLIC BEVERAGES, NARCOTICS, AND DANGEROUS DRUGS - PROHIBITED

A. No driver, entrant, or crew may consume alcohol until all practice, racing, or track time for his group is finished for the day. No official may consume alcohol until his duties have been completed for the day. Anyone who has consumed any alcohol on the day of an event, other than following the conclusion of his activities, shall not participate on that day, may be excluded from the balance of the event, and may be penalized. Alcohol may not be consumed until after all the days on track activities are concluded.

B. The use at an event by any participant of any Federal Schedule 1 controlled substance (including marijuana), or other drugs that affect the ability of the participant to safely participate in the event or may otherwise adversely affect the safety or integrity of the event, is specifically prohibited. Certain prescription and non-prescription medicines may also impair performance so competent medical authority should be consulted prior to using such medicines and participating in the event. Any participant who violates this prohibition:

- shall not seek to participate in the event
- may be excluded from the event by the Chief Steward, Safety Steward, or the Chief of an official's specialty
- may be removed from the grounds by the order of the Chief Steward or Safety Steward.

As a condition of continued participation and/or retention of any SCCA license, the participant may be required to submit to such testing procedures that may be established by SCCA in its sole discretion. Failure or refusal to submit to such testing shall be deemed a violation of the above prohibitions. However, SCCA assumes no obligation or duty to establish such testing procedures and/or to test participants on a random basis or in a specific case.

4.8 OTHER EVENT PROCEDURES

A. In car cameras must be securely mounted to the vehicle and will be inspected during the Tech process. Camera mountings deemed unsafe will not be permitted during competition. Camera MUST be mounted at tech for approval.

B. All drivers, their crew and guests MUST sign the waiver and be issued a credential. Credentials for crew and guests must be displayed at all times.

C. Current SCCA & PHA stickers must be appropriately displayed.

4.8.1 DISQUALIFICATIONS

Any car using any road other than the course to return to the start will automatically be disqualified unless a separate return route had been designated by the event Chief Steward. Any driver found to have received any tickets for traffic violations on the course while it is open to the public, if applicable, will be disqualified. Drivers are also responsible for their service vehicles, any support or service vehicle found racing on any public road or access road during the course of the event will cause his driver to be disqualified. Any driver bringing an unauthorized passenger in his/her competition vehicle from any area of the course will be disqualified.

4.8.2 RUNNING OF CLASSES

All entrants must run in their designated groups. (Exceptions for good and sufficient reason will be considered.)

4.8.3 UNMANNED AIRCRAFT SYSTEMS

Commercial and private unmanned aircraft systems (aka "drones") are prohibited unless authorized by the Chief Steward.

4.8.4 PROTESTS

Instead of a "Protest", Competitors or Event Officials with a question or concern about another competitor's vehicle or behavior may file a "Compliance Query" to the Chief Steward, in writing, prior to the end of competition for an event. The Chief Steward or designated official or compliance committee will determine the answer to the question as soon as possible and before official results are posted. **All involved must remain respectful throughout the whole process.**

Details can be found at: https://timetrials.scca.com/pages/protests-appeals-and-penalties

Note that in the case of vehicle compliance queries, the car speaks for itself. Each competitor is ultimately responsible for ensuring that their vehicle is compliant with all safety and car preparation rules.

5. EVENT RULES

5.1 CLASSIFICATION OF EVENTS

Events sanctioned by the SCCA shall be classified according to the persons eligible to take part, the categories of cars eligible to participate, and the awards offered.

SCCA may grant sanctions to organize various classes of events to be conducted in accordance with the Time Trial Rules (TTR) and Supplementary Regulations. All entrants to all PHA Events must be current SCCA members (this includes weekend memberships).

Time Trials

These events utilize fixed racing circuits (approved by the National Office) and other temporary courses (airports, large lots, etc.). Safety items are generally similar to Club Racing events, as similar speeds can be achieved. (That is, more safety equipment is required, such as roll bars, harnesses, driver suits, etc.) Novice instruction is used, but the emphasis is on competition. Either a TT Competition license, TT Novice Permit or alternate license (as defined by 7.6) is required.

Hillclimbs

Safety items are generally similar to Club Racing events, as similar speeds can be achieved. Novice instruction is used if novices are permitted to enter. Either a TT license, Hillclimb license, or Novice Permit or alternate license (as defined by section 6) is required, but some events may restrict entry to Hillclimb licenses or higher.

Detailed descriptions of each Level of event are available in the section 3.

5.2 COURSES

Notwithstanding definitions to the contrary, the word ‘course’ and the word ‘circuit’ may be used interchangeably in these rules.

5.2.1 SELECTION OF COURSES

The selection of any course for an event shall be subject to the approval of the SCCA. Specifically, the SCCA may:

A. Limit a course as to the classification of event to be sanctioned there.

B. Restrict the number of cars which may be started simultaneously or in total.

C. Restrict the number of entries which may be accepted for an event or a competition.

D. Restrict the course to certain classes and categories of cars.

E. Restrict the course to certain grades of drivers.

F. Disapprove the course for all SCCA speed events.

G. Set forth certain areas as “safe” worker areas or restrict areas considered to be “hot”.

H. Designate spectator areas.

I. Determine eligibility for non-spectator status for Time Trials events at that facility.

5.2.2 MEASUREMENT OF COURSES

The official length of a course shall be measured along the centerline of the road.

5.3 INSURANCE

5.3.1 INSURANCE REQUIREMENTS

All events sanctioned by the SCCA shall be insured for Event Liability and Participant Accident coverage. Event Liability coverage may be provided by the SCCA Master Insurance Plan or an equivalent policy (equivalency to be determined by the SCCA Risk Management Department), if obtained in compliance with the procedures described in section 5.3.5,

ALTERNATIVE LIABILITY INSURANCE PROCEDURES FOR EVENTS. Participant Accident coverage shall be provided by the SCCA Master Plan.

5.3.2 INSURANCE AVAILABILITY

The Safety Steward shall delay the beginning of the event until he is satisfied that the insurance required under this section is provided.

5.3.3 COVERAGE AND LIMITS

The minimum coverage and limits for competitive events are available from the National Office upon request.

5.3.4 INCREASED LIMITS FOR LICENSED SCCA MEMBERS

$1,000,000 medical reimbursement benefits are provided to licensed SCCA members properly credentialed for an event.

5.3.5 ALTERNATIVE LIABILITY INSURANCE PROCEDURES FOR EVENTS

The organizers and/or promoters of any SCCA-sanctioned event which is to be insured with liability coverage other than that provided by the current SCCA Master Insurance Plan shall adhere to the following:

A. A fully worded and certified Liability Policy (or policies) of insurance equivalent to the requirements set forth in this section shall be forwarded to the SCCA Risk Management Department so that receipt of the Liability Policy (or policies) will occur not less than twenty (20) days prior to the scheduled commencement of the event to be insured by such Liability Policy (or policies). The Risk Management Department in its sole discretion, shall determine whether the Policy is equivalent and acceptable.

B. If such fully worded and certified Liability Policy (or policies) is not received by a date twenty (20) days prior to the scheduled commencement of the event to be insured, the Risk Management Department shall have the right, but not the obligation, to cause the event to be insured for liability under the current SCCA Event Insurance Plan. Certificates evidencing such coverage and a billing for the appropriate premium charge therefore shall be sent to the event organizers and promoters. In case the premium charge is unpaid by a date fourteen (14) days prior to the scheduled commencement of the event, the Risk Management Department shall cause the event to be canceled.

5.4 SANCTIONS

An SCCA sanctioned event may be organized by:

- The SCCA.
- An SCCA Region(s).

5.4.1 REQUIRED APPROVAL

The names or emblem of the SCCA shall be associated only with events sanctioned by SCCA. Organizers shall not distribute Entry Forms or Supplementary Regulations for an SCCA event prior to obtaining an SCCA sanction.

5.4.2 APPLICATION FOR SCCA SANCTION

Every application for SCCA Sanction shall be submitted on the current Official Form and comply with all SCCA requirements.

5.4.3 SANCTION PROCEDURES

The sanction is the documentary authority, granted by SCCA, to organize and hold a competition. A Sanction Number and document will be issued when all requirements have been met and the application approved. Sanction numbers will be issued via e-mail and application submission should be planned accordingly.

5.4.4 LATE FEE

A late fee of fifty (50) percent of the sanction fee shall be charged on all sanctions postmarked after the applicable deadline, unless prior arrangements have been made and approved by the National Office Sanction Administrator.

5.5 OFFICIAL SCHEDULE

THE OFFICIAL SCHEDULE FOR AN EVENT SHALL CONTAIN THE FOLLOWING INFORMATION:

A. A conspicuous announcement: “Held under the SCCA Time Trial and PHA Supplemental Rules.”

B. The event sanction number.

C. The name of the organizer (Region).

D. Name, location, and date of the event.

E. Schedule of planned competitions.

F. Classes of cars and groupings.

G. The names of the Chief Steward, Safety Steward, Chief Driving Instructor and Chief Registrar.

H. The names of additional principal Officials.

5.6 CHANGES TO THE SUPPLEMENTARY REGULATIONS

No changes shall be made to the Supplementary Regulations, except for the schedule, event officials and/or class groupings, after the beginning of the period for receiving entries unless unanimous agreement is given by all affected competitors already entered, or the Chief Steward so decides for reasons of safety or forces beyond their control. All schedule changes shall be approved by the Chief Steward. Changes of event officials must be submitted to the Time Trials Divisional Program Manager who will then notify the National office.

5.7 ENTRY FORMS

Entry forms shall contain the following:

A. Spaces for full names, addresses, membership numbers, and license numbers of entrants and drivers, and for driver's Region of Record

B. Space for full description of cars to be entered.

C. An announcement: "Held under the SCCA Time Trial Rules."

D. Spaces for signatures of entrants and drivers for waiver of liability and/or indemnity declarations, acknowledgment of the authority of the SUPPS, declaration that cars entered comply with the provisions of the SUPPS, persons to be notified in case of accident.

E. The Sanction Number assigned to the event.

F. Emergency contact information must be included with the entry.

G. Any other information required for the clarification of all other details of the event.

5.8 ENTRIES

An entry made and accepted in accordance with the Time Trial Rules and the Supplementary Regulations shall constitute a contract binding an entrant to take part in the competition entered unless prevented by forces beyond his or her control. The organizers shall comply with the conditions of entry, provided that the entrant has made every effort to take part in the competition. A breach of such contract may be treated as a breach of the SUPPS.

An entry is considered official, and a competitor is considered entered in an event when:

A. A signed, completed, and official entry blank has been submitted and received by the organizers (subject to subsequent refusal per section 5.8.2).

B. The entry fee has been paid and received by the organizers.

C. All fines due and payable to SCCA must have been paid.

5.8.1 DUAL ENTRY

Dual entry is permitted under a single sanction number. Separate entry forms and fees are required for each class entered. Only one (1) Vehicle Logbook is required but it shall contain pictures of each configuration.

5.8.2 REFUSAL OF ENTRY

The organizers have the right to refuse an entry at their discretion without giving a reason for refusal. If an entry for any competition is refused, notification of such refusal shall be sent to the entrant at the address given on the Entry Form as soon as possible.

5.8.3 FALSIFICATION OF ENTRY

An entry which contains a false or incorrect statement may be determined to be null and void by the Time Trials Chief Steward or other First Court. The entrant may be deemed guilty of a breach of the SUPPS, the entry fee may be forfeited, and further penalties may be imposed.

5.8.4 WITHDRAWAL (SCRATCH) OF ENTRY

An entry may be withdrawn without penalty if the withdrawal is made prior to the entry deadline date. In such cases, the organizers shall return the entry fee. For withdrawals after the entry deadline, return of all or part of the entry fee is at the organizers' discretion.

5.9 SUBMISSION TO RULES

EVERY PERSON, BODY, GROUP OF PERSONS, REGION OF THE SCCA, OR ORGANIZER WHO APPLIES FOR AND IS GRANTED AN SCCA SANCTION TO CONDUCT AN EVENT, OR ANY PERSON WHO APPLIES FOR AN SCCA LICENSE SHALL BE DEEMED TO HAVE AGREED TO THE FOLLOWING AND SO ACKNOWLEDGE IN WRITING UPON REQUEST:

A. He or she is familiar with the Supplementary Regulations.

B. He or she agrees without reservation to the consequences resulting from the TT and Supplemental Rules.

C. He or she renounces the right to have recourse, except with the written consent of the SCCA, to any arbitrator or tribunal not provided for in the TT and Supplemental Rules.

5.10 WAIVERS

All participants (entrants, drivers, crew, workers, and guests receiving passes) shall sign the SCCA Participants Agreement (waiver of liability) prior to receiving credentials (passes).

5.11 ENTRY LIST

It is recommended the event organizers make the official list of competitors available to all entrants at no charge as early as possible prior to the commencement of the event.

5.12 RESULTS

The organizing region will send Official Race Results and Observer Reports to the National Office and TT Divisional Program Manager within ten (10) days of the event.

5.13 AWARDS

Awards shall be based on the single best recorded run. 1st through 3rd event plates will be awarded for 1st through 3rd place in each class; all other entrants will receive an event participant plate.

5.14 POSTPONEMENT, ABANDONMENT, OR CANCELLATION

All or part of an event may be postponed or canceled if the Chief Steward and Safety Steward (in full agreement) order that all or part of the event be postponed or cancelled for reasons of safety or forces beyond their control.

5.15 FLAGGING AND COMMUNICATIONS

5.15.1 GENERAL ORGANIZATION

The Flagging and Communications Chief shall be responsible for the establishment and operation of the Flagging and Communications organization at each SCCA speed event. The purpose of this organization shall be to provide safe course control by:

A. Informing the Chief Steward and other Officials, through the communication network, of the condition of the course and the competing cars, and of any situation requiring decisions and/or action by the Race Officials.

B. Relaying information and instructions from the Chief Steward to the persons operating the various emergency vehicles and equipment around the course as well as to the race drivers and turn personnel.

C. Undertaking emergency action needed to protect the lives and property of drivers, workers, or spectators in the event of an accident.

D. Maintaining a clear course.

5.15.2 CENTRAL CONTROL STATION

The Communications Chief shall have charge of the Central Control Station where all communications affecting the control of the event are carried out. The Central Control Station shall maintain immediate liaison with the Chief Steward and all corner stations.

5.15.3 CORNER STATIONS

A. Number - There shall always be a sufficient number of corner stations established and manned to keep the entire course under observation and to protect all areas of the course not immediately visible to oncoming drivers.

B. Location - Each corner station shall be located in accordance with the following considerations: The flagmen to have a clear view of the area to be covered; maximum visibility of the flagmen to the oncoming drivers; maximum protection for the corner station crew from out of control automobiles.

C. Personnel - Each corner station shall be staffed with a minimum of one person unless otherwise approved by the Safety Steward for the event. Personnel should be properly dressed while on station. This means no shorts, tank tops, halter tops, beach wear, etc. while the track is “hot”. It is highly recommended that any person on station acting as a first responder should be wearing long sleeves and pants of at least 100% cotton material for personal safety reasons.

D. Equipment - Each corner station shall be equipped with at least the following:

1. Device for communicating immediately, privately, and without interference with the Central Control Station, other corner stations, and other stations as appropriate.

2. A red flag. Flags and their meaning are discussed in the SUPPS Section 4.5.3.

3. One Class ABC type fire extinguisher at least equivalent to a 10-pound dry chemical size although two (2) 10 pound extinguishers are recommended at all events. Any events where vehicles are running fuels that are primarily alcohol based (greater than 50% by volume) a minimum of two (2) water or foam extinguisher of the proper type are also required. The grid area shall be equipped with the same number and type of fire extinguishers as the corner stations for all events (it is highly recommended that the number of water/foam extinguishers for grid be doubled when alcohol fueled cars are participating).

4. Broom (push type) and absorbent materials (e.g. – grease sweep, oil dry, etc.).

5. If a start/finish station is used, this station shall also have a green flag, a checkered flag, and a black flag.

5.16 EMERGENCY SERVICES - MEDICAL AND FIRE SAFETY

5.16.1 PURPOSE

To establish equipment and personnel needed to handle a workable medical, fire, and safety plan. Detailed plans need to be based on the specific conditions at the event facility and local, state or federal protocols and regulations.

Medical personnel on site need to be familiar with local, state, and federal regulations for accident and medical emergencies.

5.16.2 EMERGENCY SERVICES PERSONNEL AND EQUIPMENT

5.16.2.1 MEDICAL PERSONNEL AND AMBULANCE

The following minimums apply:

A. There shall be a BLS (Basic Life Support) Unit on site staffed by at least two certified caregivers, one of whom must be an EMT at minimum.

B. Medical personnel shall report to the Safety Steward for the event.

C. It is recommended the initial medical response, which may be an ambulance, occur within two (2) minutes.

5.16.2.2 COURSE RESPONSE VEHICLE

A. There shall be at least one (1) course response vehicle which shall be equipped as specified in C. below. It is recommended the vehicle be stationed so it can reach any point on the racing surface within two (2) minutes at a speed not to exceed fifty (50) mph. The course response vehicle MUST be manned whenever the track is “hot” in order to facilitate a rapid response to any on track incident.

B. There shall be at least one (1) person assigned to each course response vehicle who is trained to use the equipment on the vehicle. It is recommended two (2) persons be assigned to each response vehicle. The course response vehicle shall be capable of flat towing a disabled race car.

C. The course response vehicle must contain at least 50 lbs. of dry chemical and/or foam extinguishers (in any combination) along with tow straps, brooms, pry bars, and absorbent materials.

D. Course Response personnel shall report to the Safety Steward unless there is a Chief of Emergency Services assigned.

5.16.2.3 WRECKER

A. There shall be one (1) wrecker or equivalent which shall be capable of lifting or removing any race car from the event. The wrecker may also serve as a fire truck if equipped as specified in 5.16.2.2. .

B. There shall be at least one (1) person assigned to a wrecker who is trained to use the equipment.

C. Wrecker personnel shall report to the Safety Steward unless there is a Chief of Emergency Services assigned.

5.16.2.4 TELEPHONE

There shall be an operating telephone or radio readily available to the Chief Steward and Chief Safety Steward which can contact community emergency services and hospitals.

5.16.2.5 OTHER RECOMMENDED EQUIPMENT

It is recommended that the following items be immediately available to the Response Truck Crew:

A. Sharp knife

B. Bolt cutters, 3 foot

C. Fire axe

D. Pry bars, 2 foot and 6 foot

E. Rope, (3/4-inch nylon/or strap, 6000 lb. test), 30 feet

F. Bow saw (30 inch blades) or equivalent tool

G. Toolbox, containing: vice grip pliers, hammer (5 lb.), small pry bar, screwdrivers (flat head and Phillips), chisel, tin shears, hack saw and blades, adjustable crescent wrenches (large and small).

H. Oil dry compound

I. The equipment should be carried on the response vehicle, wrecker or MERV (Multiple Emergency Response Vehicle).

J. If a power compound rescue tool and trained operator is available locally through Fire or EMS services, it does not have to be located at the event site.

K. Comparable equipment may be substituted with the advance approval of the Chief Steward and Safety Steward.

5.16.3 Operating Rules

5.16.3.1 EMERGENCY PLAN

The Safety Steward shall, before allowing the commencement of the event, verify that an emergency plan is in place. A copy of the emergency plan should be on file with the National Office.

5.16.3.2 BRIEFING

The Safety Steward shall meet with the Medical Crew to confirm duties, duty stations, equipment, race circuit characteristics, vehicles, and other protocol.

5.16.3.3 DISPATCHING

The dispatching of emergency vehicles on the track shall be authorized by the Chief Steward. Dispatching procedures shall be agreed on in advance by the Chief Steward, Safety Steward and emergency response personnel.

5.16.3.4 HOSPITAL ARRANGEMENTS

The Medical Crew (crew staffing the on-site ambulance) shall establish a primary route to the primary and secondary hospital prior to an event.

The Event Organizer shall confirm the availability of hospital staff and facilities.

5.16.3.5 IDENTIFICATION OF PERSONNEL

Emergency services personnel should be readily identifiable by some means other than the usual passes (e.g., vest, arm bands, jackets).

5.16.3.6 START OF RACE

All emergency vehicles shall be equipped and staffed at all times while race cars are on course.

5.16.3.7 SUSPENSION OF RACING

Racing shall be suspended if the personnel specified in 5.16.2.1, or the equipment specified in 5.16.2.2 and 5.16.2.3 are no longer on the premises or are unable to perform their assigned duties.

6. LICENSES

6.1 LICENSE GRADES

The following license grades apply to PHA events:

- TT/Hillclimb Novice permit
- TT Driver
- Hillclimb Driver

NOTE: For Minors, see section 6.8

6.2 PARTICIPATION REQUIREMENTS

A license holder shall participate in the minimum number of SCCA races specified for his or her grade of license.

6.3 MEDICAL REQUIREMENTS

Medical requirements can be found on page 2 of the Time Trial/Novice Time Trial License Application

6.4 TIME TRIALS PARTICPATION LOG BOOKS

Time Trial Participation Log Books and/or Time Trial Competition Licenses may be used as documentation of on-track experience that may gain credit towards an SCCA Club Racing Competition License at the discretion of the SCCA Drivers School Chief Steward.

6.5 NOVICE PERMITS

TT/Hillclimb Novice permits will be issued by the SCCA National Office or SCCA regions to enable student drivers to obtain the training and experience needed for TT or Hillclimb Licenses. Applicants under the age of 18 must apply directly to SCCA Member Services and provide a completed SCCA MS-L minor waiver (Form MS-L).

6.5.1 NOVICE PERMIT UPGRADES

Novice permit holders must complete three Time Trials or Hillclimb events with a satisfactory rating by the Driving Instructor of the event. Once these are completed, they may apply to the National Office for an upgrade to a TT or Hillclimb license.

6.5.2 APPLICANTS WITH PRIOR RACING EXPERIENCE

The TT Divisional Program Manager may waive all or part of the requirements for drivers with prior racing experience. Participants with a Regional Competition license, its equivalent, or higher, may use that license and do not need to obtain a Time Trials or Hillclimb license. A valid American Rally Association (ARA) license may be used in place of a TT Novice License; these drivers will retain novice status until obtaining a TT or Hillclimb License. All participants in Time Trials or Hillclimb events must have a current SCCA membership.

6.5.3 RACING ON A TT/PHA NOVICE PERMIT

The holder of a TT/ PHA Novice Permit shall participate in three events and obtain the signature of the Chief Driving Instructor of the events attesting to satisfactory performance. Novice Permits may not be renewed or reissued for a third consecutive year.

6.5.3.1 NOVICE REGULATIONS

A novice is defined as any driver currently competing under a TT/Hillclimb Novice Permit or SCCA Novice Competition License **OR** any driver that has not competed at that site in the past 5 years. ALL novices are required to meet the following expectations in order to obtain a SAT (satisfactory) rating:

A. Novices must present themselves and their car at registration on Friday evening.

B. Novices must attend the Novice Driver's Meeting and Sunday Driver's Meeting.

C. All novice cars **MUST** display three (3) ID stripes on both sides of the vehicle. The color of the stripes must be of a contrasting color from the body paint.

D. Complete the weekend without "Incidents" as defined in section 6.5.3.2.

Failure to meet these expectations may result in an UNSAT (unsatisfactory) rating or disqualification from the event.

Note: Only those drivers who meet the criteria of 6.5.3.1 above will be eligible for participation in novice touring runs unless permission is granted by the Chief Steward. In that case the driver shall attend the novice drivers meeting.

6.5.3.2 NOVICE INCIDENTS

A. Two or more wheels off course

Result: Mandatory discussion with the Chief Driving Instructor. SAT rating possible. Corner worker reports could adversely affect this rating.

B. Spin without contact

Result: Mandatory discussion with the Chief Driving Instructor. A SAT rating with cautionary notation in the TT Novice Permit. Corner worker feedback may result in an UNSAT rating.

C. Off course crash as a novice

Result: Mandatory discussion with the Chief Driving Instructor AND Chief Steward about cause and effect. For example: Overdriving, wrong line, too fast for skill level, car failure, etc. The driver can offer mitigating circumstances, but generally, crashing as a novice is frowned upon. UNSAT entry in the Novice Permit.

D. Unsportsman-like Conduct. (Uncontrolled temper, disrespect towards drivers, workers and/or officials, conduct deemed inappropriate by the Stewards/Instructors)

Result: UNSAT entry in the Novice Permit with appropriate notation of the issue and possible disqualification for the weekend. Final decision is with the Chief Steward.

6.5.4 REVOCATION

A Novice Permit may be revoked by the TT Divisional Program Manager, appointed by the SCCA for his division of record, upon recommendation of the Chief Safety Steward or Chief Driving Instructor of an event.

6.6 HILLCLIMB LICENSE REQUIREMENTS

Holders of TT/PHA Novice Permits who are current SCCA members in good standing and who have satisfactorily completed the event requirements in 6.5.3 may apply for upgrade to the National Office.

6.6.1 TT NOVICE PERMIT AS TEMPORARY LICENSE

Should a TT Novice licensee choose to attend a restricted TT event (not approved for novices) after fulfilling the requirements for upgrade, they should contact the TT Divisional Program Manager to make arrangements to inform the registrar of the event in question of the current license status.

6.6.2 RENEWAL OF LICENSE

Renewal forms will be mailed automatically. Hillclimb License holders may apply for renewal by contacting the National Office.

6.6.3 APPLICANTS WITH PRIOR DOCUMENTED EXPERIENCE

Participation requirements for issuance or renewal of a TT or Hillclimb License may be waived in total or in part only by the TT Divisional Program Manager or SCCA Club Racing Manager.

6.7 OTHER COMPETITION LICENSES - ACCEPTED FOR TIME TRIALS EVENTS.

The following competition licenses are accepted for PHA events: SCCA Professional, National, Regional, Vintage and Novice. Also accepted are Canadian ASN-FIA licenses and those approved in the current GCR. Other types of competition licenses may be accepted per Supplemental Regulations. Entrants with other types of accepted competition licenses must be current SCCA members in good standing and should have completed the minimum number of events required for the applicable competition license during the license year. Any of the accepted competition licenses must meet the eligibility requirements in 6.7.1.

6.7.1 ELIGIBILITY

Entrants with other types of accepted competition licenses must be current SCCA members in good standing and shall have completed the minimum number of events required for the applicable competition license during the license year.

6.8 LICENSING OF MINORS

Minor requirements can be found on page 2 of the Time Trail/Novice Time Trial Application

6.9 PROBATION LETTER HOLDERS

All SCCA probation letter holders shall present the letter at registration to the Chief Steward.

6.10 TIME TRIALS OFFICIALS' LICENSING SPECIALTIES

Time Trials officials include the following:

- TT Volunteer
- TT Driving Instructor
- TT Chief Steward
- TT Safety Steward
- TT Tech Inspector
- TT Course Inspector

6.10.1 TIME TRIALS OFFICIALS LICENSE LEVELS

In the Time Trials program, these designations are awarded upon demonstration of ability and experience first, with amount of participation as a secondary consideration.

Apprentice - This grade shall be used for those in training and unless expressly stated within the SUPPS shall have an Official license holder of the same specialty onsite. Obtaining this level of license requires no approval and can be issued by contacting SCCA National office.

Official - For those who demonstrate competent service and have completed an acceptable Apprentice period. This requires an upgrade request.

Specialist – This grade designates those who are capable of taking on leadership positions. They will be responsible for training new Apprentices and will be those who are eligible for Divisional leadership positions. This requires an upgrade request.

6.10.2 TIME TRIALS OFFICIALS LICENSE UPGRADE GUIDELINES

The following participation guidelines are recommended for license upgrades. Submit all upgrades on a Time Trial Official application. Information shall include the date, location/event, sanction number, specialty worked and signature, membership number of the specialty Official.

A. Apprentice to Official level upgrade for TT Safety Steward or TT Course Inspector
   1. Completing an SCCA approved safety seminar
   2. Successful completion of 4 Time Trial events in any combination
   3. Highly recommended 3 of 4 events be Time Trials Level or higher

B. Apprentice to Official level upgrade requirements (except TT Safety Steward or TT Course Inspector)
   1. Successful completion of 3 Time Trial events in any combination
   2. Highly recommended 2 of the 3 events be Time Trials or higher

C. Approval for Apprentice to Official upgrades
   1. To be submitted to and approved by the TT Divisional Program Manager. The application will be forward to Member Services for processing.

7. PHA EVENT OFFICIALS

7.1 OFFICIALS

The staff of principal officials, whose duty it shall be to direct the control of the event may include:

- Chief Steward
- Safety Steward
- Event Chairman
- Worker Chief
- Chief of Timing
- Chief Technical and Safety Inspector (Scrutineer)
- Chief Driving Instructor
- Chief Registrar
- Chief Sound Control

They shall be termed “Officials” and may have assistants also termed “Officials,” to whom any of their duties may be delegated. Any worker is considered an official. When a PHA event is held in conjunction with a Club Race event, all event officials may be those of the Club Race event.

7.2 RACE OFFICIAL LICENSES

It is required that all Officials under SCCA control at all SCCA sanctioned PHA events shall either be licensed in the specialty or hold a logbook in the specialty, except medical personnel and workers in “safe” areas as listed below. These licenses are to be checked at Registration (preferred) or by the Chief of the Specialty at each event.

The Divisional Time Trials Safety Steward shall have the authority to determine if a work area is classified as “safe” as to allow non-members to be utilized. In the absence of the Divisional TTSS, the event Safety Steward, Chief Steward, and Event Chairman may deem an area “safe” through unanimous agreement. Any areas not deemed safe by one of the above methods shall default to “hazardous” status and be thereby restricted to SCCA members only.

If licensed Time Trials Officials are not available, Club Racing Official Licensees may be substituted. This is intended to allow Regions or Divisions a way to start new programs.

7.3 REQUIRED OFFICIALS

At every event there shall be a Chief Steward, Safety Steward, and Chief Technical and Safety Inspector, in addition to other officials as necessary. Additionally, a Chief Driving Instructor must be present at any event where novices are participating.

7.4 RIGHT TO SUPERVISION

The SCCA Club Racing Department reserves the right to designate a qualified person to evaluate any competition.

7.5 APPOINTMENT

All Officials shall be appointed by the Region conducting the event, subject to approval by the Time Trials Divisional Program Manager, or the TT Safety Steward of the Division for TT Safety Steward positions.

7.6 CONDUCT

7.6.1 STANDARDS OF BEHAVIOR

Every Official shall conduct himself or herself according to the highest standards of behavior. Failure to do so may result in loss of official appointment for the event, or other penalty as determined by the Club Racing Manager.

7.6.2 LOSS OF LICENSE

Any license holder (whose actions are deemed by the SCCA Time Trials Administrative Council to be contrary to the best interest of SCCA) may have his or her license revoked, either for a period specified by the Time Trials Administrative Council, or permanently. This action is appealable to the Board of Directors.

7.7 PLURALITY OF DUTIES

The same person may hold more than one official position. Any substitution of officials shall be coordinated with the Chief Steward and other officials.

7.8 POWERS OF THE SOM – OPTIONAL

All powers of the SOM shall fall to the Chief Steward when this option is used by the event organizers. All Club Race Steward protocols should be followed if the event organizer chooses to utilize a SOM and all related stewards. In the event of a protest, the SOM shall appoint three individuals to hear, discuss, and rule on the protest. These individuals shall have no material interest in the involved parties or in the outcome of the protest.

7.9 CHIEF STEWARD

The Chief Steward is the executive responsible for the general conduct of the event in accordance with the SUPPS. In the event of a protest, the Chief Steward shall appoint three individuals to hear, discuss, and rule on the protest. These individuals shall have no material interest in the involved parties or in the outcome of the protest.

7.10 EVENT CHAIRMAN

The Event Chairman shall be responsible for the organization of an event. Specifically, he or she shall: Arrange the required equipment and facilities in accordance with Section 5.16, EMERGENCY SERVICES – MEDICAL AND FIRE SAFETY.

7.11 CHIEF STARTER - OPTIONAL

The Chief Starter shall operate directly under the supervision of the Chief Steward. The Chief Starter gives directions to competing drivers by flag, hand, and body signals prescribed by the SUPPS with respect to starting, suspending, and ending a race.

7.12 COURSE CHIEF - OPTIONAL

The Course Chief shall be responsible for final preparation and maintenance of the course and other related duties assigned to them by the Chief of Emergency Services in conjunction with the Safety Steward and Chief Steward.

7.13 WORKER CHIEF

The Worker Chief shall be responsible for recruiting, training, and assigning qualified persons to corner stations. At least one worker at each station should be an SCCA member, preferably licensed in a specialty. Additionally, the Worker Chief is responsible for overseeing other workers including start line workers, pit and grid workers, and working with the Chief Steward to assign a person to the Control station.

7.14 COMMUNICATIONS CHIEF - OPTIONAL

The Communications Chief shall be responsible for the establishment and operation of the communications system, which shall include all corner stations and a central control.

7.15 CHIEF OF TIMING

The Chief of Timing shall be responsible for the accurate timing and scoring of the event in accordance with the SUPPS (For non-passing events, lap charts are waived). Specifically, he or she shall:

A. Recruit, train, assign and supervise qualified personnel to time and score the event.

B. Furnish the Chief Steward, Chief Driving Instructor and Event Chair any times and results that they may request.

C. Maintain records of official times and lap charts for all competing cars.

D. Compile and publish the Official Results of all competitions, submit copies of completed Official Results to the Event Chairman for distribution to the Chief Steward, the organizers, and the SCCA, and submit complete Official Results within ten (10) days to the Divisional Points Keeper.

E. At spectator events, work closely with the Press Officers, press, and other media, as well as with circuit, radio, and/or television announcers, providing qualifying information, results, and any other data requested, as quickly as possible.

7.16 CHIEF TECHNICAL AND SAFETY INSPECTOR

The Chief Technical and Safety Inspector shall ascertain that the cars comply with the current SUPPS Section 8.3. Specifically, he or she shall:

A. Approve cars that comply with all safety regulations. This area should be emphasized over compliance with class specifications. This is to say that the Inspector may report a car that does not meet the specifications of the class if they notice the situation, but they are to be primarily concerned about the car meeting the safety regulations.

B. Conduct inspections of cars at the request of the Safety Steward, Chief Driving Instructor or Chief Steward.

C. Report to the Chief Steward any cars that he or she finds do not conform to the requirements of the SUPPS and/or the appropriate GCR or Solo Specification Books.

7.17 CHIEF OF EMERGENCY SERVICES - OPTIONAL

The Chief of Emergency Services shall be responsible, in conjunction with the Safety Steward and Chief Steward for staffing and equipping the medical organization in accordance with Section 5.16, EMERGENCY SERVICES – MEDICAL AND FIRE SAFETY.

7.18 CHIEF DRIVING INSTRUCTOR

The Chief Driving Instructor shall observe all novice participants at several locations throughout an event when possible. The Chief Driving Instructor shall record all incidents that involve novices, and at the conclusion of each competition, shall give the TT Divisional Program Manager a written report of all incidents. This will help determine eligibility for upgrades from novice to full licenses. Additionally, the Chief Driving Instructor shall arrange for a Novice Orientation at each event. This may be done as a classroom session (or multiple sessions) or a course tour. All novices present at an event must be present for this Orientation unless excused by the Chief Steward.

7.19 PRESS OFFICER - OPTIONAL

The Press Officer advises the Officials on press information and acts as liaison with the promoter's press director, if any. Chief Officials and SOM shall cooperate with the Press Officer in carrying out his or her responsibility to apprise the press on matters of public interest.

7.20 CHIEF REGISTRAR

The Chief Registrar shall be responsible for accepting, certifying, and processing all entries and credentials for drivers, crew, and Officials and the posting of all required signs/placards in the registration area.

7.21 SAFETY STEWARD

The responsibilities of the Safety Steward are as follows:

A. To investigate accidents and forward the originals of all reports, including original releases, to the Risk Management Department of SCCA.

B. To notify Risk Management Department, the same day via telephone, of any accident which involves serious injury to a participant or any injury to a spectator.

C. To mail copies of the material sent to the Risk Management Department to the Divisional Safety Steward.

D. During the event, to report to the Chief Steward any hazards which require further investigation or action.

E. To perform safety related duties as delegated by the Chief Steward.

F. To ensure the presence of appropriate Emergency Services personnel and equipment at all times while the event is underway.

G. Take appropriate measures to ensure adequate crowd control. Deputy Safety Stewards and Crowd Marshals may be assigned for this purpose. It is the responsibility of the Safety Steward to review and confirm the placement of all barriers and crowd control devices prior to the start of the event, and to take measure to ensure they remain in position during the event.

H. Determine areas of restricted personnel because of safety concerns. If available, this should be done in cooperation with the Safety Steward of the Division, or with a Course Inspector, if present.

I. Use every reasonable means to limit access to restricted areas to those who have proper credentials. The use of a credential system (armbands or the like) is recommended at any event where multiple points of entry are possible.

J. Personally examine the insurance and sanction paperwork prior to the start of the event.

K. Conduct a meeting of course workers, crowd control personnel, and Deputy Safety Stewards prior to the actual start of the event.

L. Make a final course inspection just prior to the beginning of competition or prior to the resumption of competition after a delay of an extended period. This check is to assess the placement of all personnel, safety equipment, barriers and protective placements (hay bales and the like), and to confirm the readiness of Emergency Services personnel and equipment.

A visiting Safety Steward shall have the responsibility of notifying the Event Safety Steward of any safety concerns, and this notification shall serve as informational only. A visiting SS has no authority to overrule or negate decisions of the Event SS, unless the visiting SS is the TTSS of the Division, and then this authority should only be used as a last resort.

In the event of non-compliance with safety Regulations, the Safety Steward shall take the following steps:

A. Advise the Chief Steward of the infraction and request the situation be remedied before the next car runs.

B. If step one fails to resolve the situation, inform the Chief Steward that the event is shut down until the problem is corrected.

C. If steps above do not result in correction, inform the Chief Steward and Event Chairman in writing (via a Memorandum of Record) that the event insurance is suspended until the problem is corrected, and that they personally will be held legally liable for any further event operation. All workers and participants should be verbally notified of the situation by whatever means are available. Copies of the Memorandum of Record should be sent to the TTSS of the Division and to the Time Trials Administrative Council for review.

While the event TTSS does have the right to cancel an event for safety reasons, this should be used as a last resort ONLY. Every attempt should be made to resolve the situation and continue the event in a timely manner. Safety Stewards should work diligently in cooperation with Event Chairpersons and Chief Stewards to ensure an event that is safe for all participants, workers, and spectators. Safety is not an area where compromises can be made, and it is up to all officials to work together to continue the long-standing record of safe events that has become the tradition of SCCA.

7.22 SOUND CONTROL CHIEF

The Sound Control Chief shall be responsible for monitoring racing vehi9cles at events where sound control limits are required by the facility being used. Sound Readings will be taken in accordance with the SCCA Sound Control Manual. Specifically, he or she shall:

A. Review or establish sound meter monitoring location.

B. Establish how reading(s) shall be made.

C. Advise the Chief Steward of the readings.

D. Submit post-race reports to the Chief Steward.

E. Monitor weather and ambient conditions throughout the day.

F. Perform field calibration in accordance with the Sound Control Manual for sound meter, microphone, or other instruments.

G. Obtain yearly calibration of equipment from manufacturer or qualified laboratory.

7.23 COMPLIANCE CHECKING CREW - OPTIONAL

When assigned to an event by the Club Racing Department, all members of this crew will have the official status of an Assistant Chief Steward. Their sole responsibility is to advise the Chief Steward of cars not in compliance with the SUPPS and/or the Supplemental Regulations for the event.

8. TECHNICAL & SAFETY INSPECTION

In order to enter the race course at any time during an event, a vehicle shall display a Tech Sticker signifying successful completion of technical and safety inspection as prescribed in the following sections. Passing safety inspection and receiving a Tech Sticker is an indication that the car is approved to go on course. It is not a certification of legality.

All cars must pass all inspection point items specified in section 8.3.

8.1 FULL INSPECTION

All competition vehicles will be subject to a full technical and safety inspection at each event. Hardtops and sunroofs must be removed and/or securely fastened. Convertible tops must be down and securely fastened. Roll bars and Roll Cages must conform to the SUPPS as described in section 10. All forward facing glass lights must be taped. Five or six-point driver restraint systems are required.

If the vehicle is in order, a Tech sticker shall be issued.

8.2 REINSPECTION

A car shall be reinspected if damage or deficiencies from the car's previous event(s) are noted in the logbook or if the car changes category. Inspection above the minimum level may be performed on a vehicle whose logbook indicates no competition for three (3) months or more during the current year; or on vehicles as specified in Supplemental Regulations; or at the request of the Chief Steward or Safety Steward. Throughout the racing season, the Tech crew is encouraged to perform a regular reinspection through walk around observation in the pits and paddock, or through special impounds by group or class with the concurrence of the Chief Steward.

8.3 INSPECTION POINTS

The points covered at Technical and Safety Inspection shall be:

A. Eligibility for class entered - compliance with the SUPPS and GCR and/or Solo Specification Books. Each car shall have a complete and up to date logbook. (See 9.3, VEHICLE LOGBOOKS)

B. Appearance suitable for competition.

C. Appearance neat and clean. Specifically, cars showing excessive damage, structural rust, or that do not bear the prescribed identification marks shall not be approved for competition.

D. Tires - 120 mph rated or better unless otherwise specified or controlled and not showing cord at any part of the tire.

E. Brakes - Shall be pedal operated, working directly on each wheel, and in good working order. Rolling brake tests are prohibited.

F. Body Panels Shall be securely mounted. Fender skirts and hub caps shall be removed.

G. Exhaust System - Shall be directed away from the body and shall terminate at or behind a point which is equidistant from the front and rear hubs. Alternate Exhaust designs may be approved so long as it poses no danger to driver or workers and must be approved by race officials on a per case basis. Side exhaust pipes coming out ahead of the equidistant point shall have a turndown. Vertical exhaust pipes coming out of the vehicle hood shall terminate above the windshield/roofline and will only be approved for vehicles with a windshield and a roof. Cars with approved alternate designs may only compete in **Sport Unlimited, Super Modified,** Special or Outlaw, and they must meet all other required safety rules.

H. Hood and Engine Compartment - Shall be securely fastened. Battery shall be securely mounted with positive terminal covered. Throttle return shall be consistent and positive.

I. Suspension and Steering - Shall be of suitable design and in good working order.

J. Leakage and Caps - There shall be no visible fluid leaks. Monza (flip top) gas caps are prohibited.

K. Lights - Brake lights on cars so equipped and taillights on Formula cars shall operate properly.

L. Seats – Must be a one-piece, bucket-type race seat, be securely mounted and provide fore/aft and lateral support. Seats must accommodate, with appropriate routing, 5 (or more) point safety belts including sub-strap. OE seats may not be modified to accommodate belts, aftermarket seats must be installed per manufacture guidelines. It is **STRONGLY RECOMMENDED** that the driver's seat includes an upper brace if non-FIA homologated.

M. Seat Belts and Shoulder Harness - Shall conform to Supplementary Regulations as listed in section 9.20 and Section 11.

N. Tonneau Covers and Boot Covers - Shall be removed.

O. Firewall and Floor - Shall comply with Section 9.18.

P. Mirrors - Shall provide driver visibility to the rear of both sides of the car.

Q. Driver Safety Equipment shall comply with Section 9.20, REQUIRED DRIVER SAFETY EQUIPMENT. The scrutineer performing the inspection shall affix a dated, non-removable sticker or decal to helmets (if available) that comply with the helmet specifications in this section.

R. Holding Tanks - Oil holding tanks and engine transmission breathers shall comply with Section 9.23, OIL CATCH TANKS, FILTERS, AND BREATHERS.

S. Wood rim steering wheels are prohibited.

T. The driver shall not be exposed to header tanks or unshielded fuel and water lines. “Aeroquip” lines are considered to be shielded lines.

U. Windows shall be clear or uncolored. Officials may require the replacement of windshields that are considered a safety hazard.

V. Non-metallic wheel construction is prohibited. Non-metallic chassis construction is prohibited, except **in GCR classes where it is explicitly allowed by the GCR, and in the Specials PHA Supplemental classes.** ~~ASR, CSR, DSR, S2000, FA, FS and Hillclimb Specials where it is allowed.~~

W. The mounts for video/photographic cameras shall be of a safe and secure design and are subject to approval by the Chief Tech and Safety Inspector. Helmet mounted cameras may be approved on an individual basis.

X. Cool suits are allowed in all classes. Water tank mounts shall be of a safe and secure design.

Y. Data collection devices are considered to be instrumentation and are therefore allowed in all classes that permit the installation, replacement or addition of gauges, indicators or instruments.

Z. On all carburetors, (except SU, C and D Sports racers with motorcycle-type carburetors and Formula 500 Mikuni VM38) with a non-threaded fuel inlet fitting, the fitting shall be replaced by drilling and tapping the carburetor body for a threaded fitting.

9. AUTOMOBILE & SAFETY

9.1 CLASSIFICATIONS

The PHA events shall use a class structure which will maximize participation potential and enhance local competition. This allows each local series to tailor its classes to suit, so long as the following minimum requirements are met:

A. All classes listed in the current GCR (National and Regional) must be accommodated. This rule is to allow a place to compete for any car prepared to a GCR class, but does not restrict classes from being consolidated due to limited participation.

B. SCCA Solo and Time Trial class cars are accommodated by the Solo and Time Trial Derived Classes category.

C. SCCA Vintage-legal cars will also be eligible for PHA events. These cars may be prepared to current SCCA Vintage rules, and the burden of proof of legality shall fall to the competitor.

D. Other classes may be adopted as needed as long as PHA safety requirements are met. These classes may include Specials, Rally, Legends, or other classes. All such classes will be listed in the Supplemental Regulations for the series or event.

9.1.1 HOMOLOGATION REQUIREMENTS

Except for composite chassis construction, homologation is waived for PHA events, provided the car meets roll-structure requirements as set forth in Section 10 for the class of car. If the car does not meet roll structure requirements as listed and is not homologated, a special exception must be obtained from the Club Racing Technical Services department at the SCCA National office. If special permission is obtained, the driver MUST be in possession of a written copy and present it upon request of an Official at any time during the event. A Logbook shall NOT be sufficient proof of this exception, only a letter (or copy of the letter) showing the signature of a staff member of the SCCA National Office. Homologation requirements documentation can be obtained from the Club Racing Manager at the SCCA National Office.

9.2 GENERAL PROVISIONS

To compete in an SCCA sanctioned event, all cars shall comply with the requirements of the Supplementary Regulations and of the specifications for their category and class. If these General Provisions and Specific Provisions for a category/class shall conflict, the specific category/class provisions shall take precedence. For PHA events, the Supplementary Regulations for preparation shall have preference over the GCR or Solo rules in case of conflict.

9.3 VEHICLE LOGBOOKS

Vehicle logbooks are mandatory. First time entrants may purchase vehicle logbooks at the event.

A. A standard SCCA Time Trials Vehicle Logbook shall be used by all competitors at all PHA events. The Club Racing Vehicle Logbook is acceptable for those cars that are prepared to the current GCR.

B. Only one Logbook shall be issued for each vehicle (other than as a continuation of the original or replacement). When a continuation logbook is issued the original issuance date of the logbook shall be written on the front page of the continuation logbook. (It is not necessary to present all old logbooks for issuance of annual inspection stamp or a tech sticker.) The possession of two Logbooks for one vehicle shall be deemed a breach of the rules and may be penalized.

C. A complete description of the vehicle, its safety roll bar/roll cage, and the required photographs shall be entered in the places provided. All changes of ownership of the vehicle shall be recorded as provided.

D. ASN Canada FIA Vehicle History Logbooks shall be accepted at all SCCA events.

E. The TT Vehicle Logbook may be issued by a licensed TT Technical Inspector or Club Racing Scrutineer, who shall also complete the required vehicle information in the front and back of the Logbook. He or she shall conduct a thorough inspection of the vehicle, as provided in Section 8. The logbook issue date is the date of registration.

F. Identity Numbers: Each vehicle shall have an identity number corresponding to that of its logbook permanently stamped on its roll bar.

G. All Formula and Sports Racing Cars registered after January 1, 1983, are required to be Homologated by SCCA and issued a Certificate of Approval.

H. At each event, this Logbook and the Homologation Certificate (for cars required by these rules to have one) shall be presented at Technical Inspection with the signature of the driver/entrant for that event in the space provided. During Technical Inspection all deviations regarding both safety and legality shall be noted by the Technical Inspector. If a waiver for the event is permitted, by the Chief Steward or his/her designated representative, the duration of the waiver shall be noted and complied with by the competitor.

I. If a car is protested during an event and found to be illegal, the results of this protest shall be noted by the Chief Steward, or delegated to another official, such as the Chief Scrutineer.

J. In the event the vehicle is involved in an accident or is damaged due to a mechanical failure, the damage shall be noted in the Vehicle Logbook by the accident investigator or Chief Technical Inspector.

K. In the event the Vehicle Logbook is not available at Technical Inspection, the vehicle may be accepted for competition only after a thorough inspection during which all details required for the issuance of a logbook shall be recorded.

9.4 FUEL

All cars at PHA events shall use a fuel which meets the following guidelines:

A. For all cars in the Solo and Time Trial Derived Classes - Fuel must conform to the standards in the current SCCA Solo Rules.

B. For all cars in GCR-based or GCR-derived classes - Fuel must conform to the standards in the current SCCA GCR.

C. For all other vehicles- Fuel must be hydrocarbon/petroleum based (gasoline, diesel), alcohol-based (ethanol, methanol, etc.) or blends of those fuels. Fuels may contain antioxidants, metal deactivators, corrosion inhibitors and lead alkyl compounds such as tetraethyl lead. Oxygen and/ or nitrogen bearing additives (such as nitrous, nitroalkanes, etc.) are prohibited, except for those originally present in service station pump fuel.

D. All vehicles running alcohol-based fuels must have the letter 'A' following the car number (ex. – 8A, 18A, etc.). This letter shall be at least four (4) inches high, with a half (1/2) inch stroke on a contrasting background. This is to inform response workers of the presence of the fuel. For cars required to have the alcohol designator, the class designation letters shall not be in close proximity to the alcohol designator. Alternate methods of identifying cars running on alcohol-based fuels are acceptable if they are defined in the supplemental Regulations and all safety team members are briefed on the alternate designation. It is also recommended that a dye be applied (if available) to all alcohol fuels to increase fuel fire visibility.

E. Any entrant running a vehicle on alcohol based fuels greater than 50% volume must notify the event officials prior to the published entry deadline date or as specified by supplemental Regulations. This is to ensure that proper firefighting equipment is present at the event. Entrants failing to do so may be disallowed from the event.

F. Oxygen and/or nitrogen bearing oil additives are prohibited in two-cycle engine oiling systems.

G. Fuels that meet any of the above requirements but require a pressurized fuel vessel (CNG, propane, etc.) are not permitted.

H. Nitrous or any other fuel enhancement injection systems are not allowed. Cars equipped with such systems must remove the bottles used by the system prior to being allowed on the event site.

9.5 IDENTIFICATION MARKINGS

Each car shall carry identification numbers and class letters per 9.5.1, and 9.5.2, as well as SCCA and PHA logos. The Chief of Timing shall have the ultimate discretion in determining if the car number or class is displayed appropriately. Two driver cars are responsible for changing numbers between runs. Time will be assigned to the number on the car.

9.5.1 NUMBERS AND CLASS LETTERS

Numbers shall be placed on both sides of the car so that they are legible. All Formula cars with a rear wing shall have legible numbers on each rear wing side plate. Numbers shall meet the approval of the Chief of Timing and Scoring. Class letters shall be placed on both sides of the car so that they are legible. Front and rear numbers and class letters are recommended.

9.5.2 SIZE OF NUMBERS AND CLASS LETTERS

Numbers shall be at least eight (8) inches high, with a 1.5-inch stroke on a contrasting background (rear winged Formula cars shall have as large a number as possible on their rear wing side plates). Metallic (reflective) numbers and class letters are prohibited. The distance between two (2) numbers shall be at least as wide as the stroke of the numbers. Class letters shall be at least four (4) inches high, with a half (1/2) inch stroke on a contrasting background.

9.6 MECHANICAL CONDITION

A licensed Technical and Safety Inspector shall have the responsibility for approving each car before it is allowed to take part in a competition following the procedures defined in Section 8. A driver or entrant whose car is disapproved and who drives it in competition or who presents it for recheck after disapproval without the corrections specified may be penalized.

9.6.1 ALTERATIONS OR DAMAGE AFTER INSPECTION

Cars which have been altered or damaged after they have been approved at technical and safety inspection shall be subject to reinspection and reapproval.

9.7 LOSS OF BODYWORK

All major body components such as front and rear hoods, fenders, doors, and windscreens shall be maintained in normal position throughout the competition. If loss of bodywork is a safety hazard, the car may be black-flagged. A car completing a competition with bodywork missing may be penalized.

9.8 WEIGHT

All cars shall meet or exceed the minimum weight specified with driver, exactly as they come off the race circuit, at the conclusion of a race or qualifying session. Cars found to be underweight at impound are subject to penalty and shall have it noted on the next page of the Vehicle Logbook. The car shall be weighed at the next event and meet the proper minimum weight before being allowed to qualify.

9.8.1 BALLAST

Ballast may be added to all cars as required, to meet minimum weight, provided it is securely mounted within the bodywork and serves no other purpose.

9.9 NOISE

Noise limiters are suggested for any car whose sound level is above the decibel levels outlined in the GCR. For cars deemed to be too loud by the Chief Steward and another event official, the entrant shall be instructed to effect changes before their next run at that event or before the next event.

9.10 BATTERIES

Battery location is unrestricted within the bodywork (except Spec Miata, Touring, and Improved Touring). If located in the driver/passenger compartment, wet cell batteries shall be in a nonconductive marine type container or equivalent. The hot terminal shall be insulated on all cars. All batteries (on-board power supplies) shall be attached securely to the frame or chassis structure independent of the marine type container.

9.11 FUEL CELLS

Requirements for fuel cells are waived for PHA Time Trial and Hillclimb events with the following exceptions: All cars in GCR classes shall be equipped with a safety fuel cell complying with the GCR specifications, except for Touring, B/C-Spec, Spec Miata, Improved Touring, American Sedan restricted prep, production-based Vintage cars, and cars where the stock fuel tank is located between the axle center lines and within the main chassis structure (i.e., frame rails). Stock fuel tank shall remain in its stock location, or as otherwise specified in the GCR. Any car equipped with a fuel cell must meet all requirements for fuel cells as specified in the GCR.

9.12 AERODYNAMIC SKIRTS

Aerodynamic skirts are prohibited in Time Trials competition events except where allowed by Regional classes defined by Supplemental Regulations.

9.13 ACCUMULATORS (E.G., ACCUSUMPS)

An accumulator (e.g., Accusump) may be installed (except for Touring and Spec Miata). Location is free, but it shall be securely mounted within the bodywork. All oil lines that pass into or through the driver/passenger compartment shall be of metal braided hose (e.g., Aeroquip).

9.14 TRACK

Track is the distance between the centerlines of the wheels as raced, without driver, measured at a horizontal plane through the wheel hub centerline. Alternatively, it may be measured from the inside of one wheel at the hub centerline height to the outside of the other wheel, then conversely from the outside of the first wheel at hub centerline to the inside of the second wheel. The two (2) dimensions obtained are to be added together and divided by two to obtain the average. Measurements are to be taken at both front and rear of the wheels and averaged to compensate for toe-in/out. Under certain circumstances it may be preferable to measure from the outside of one wheel to the outside of another and from this dimension deduct the thickness of one wheel. This should be repeated 180° opposite to the first measurement and the two dimensions averaged.

9.15 WHEEL RIM WIDTH

Wheel rim width shall be measured at the base of the bead seat.

9.16 LIGHTS - BRAKE AND TAIL

All non-Formula cars shall have two operating red brake lights. All Formula (open wheel) and Sports Racer cars shall be equipped with a red taillight of at least the equivalent illumination power of a fifteen (15) watt bulb. This light shall be mounted as high as possible on the centerline of the car and be clearly visible from the rear. The taillight shall be illuminated when ordered by the Chief Safety Steward.

9.17 VENTILATION

All closed cars shall run with both front door windows fully open.

9.18 FIREWALL AND FLOOR

Firewall and floor shall prevent the passage of flame and debris into the driver's compartment. Belly pans shall be vented to prevent the accumulation of liquids, except composite/honeycomb structures. All rear-engine Formula cars are required to have an under tray, from the driver's foot area to the firewall, for protection of legs and torso.

9.19 FIRE SYSTEM

All cars shall meet one of the following minimum requirements:

A. On-board fire system per GCR 9.3.23.A.

B. Halon 1301 or 1211, two (2) pound minimum capacity by weight.

C. Dry chemical, two (2) pound minimum with a positive indicator showing charge. Chemical: 10 BC Underwriters Laboratory rating, potassium bicarbonate (Purple K) recommended, 1A10BC Underwriters Laboratory rating multipurpose, ammonium phosphate and barium sulfate or Monnex.

The fire extinguisher shall be securely mounted in the cockpit. All mounting brackets shall be metal and of the quick-release type. The fire extinguisher shall be reachable by the driver while seated. Exceptions will be made on a case-by-case basis when approved by Tech.

9.20 REQUIRED DRIVER SAFETY EQUIPMENT

The following driver safety equipment is required. It shall be in good condition and free of defects, holes, cracks, frays, etc.

A. Driving suits that effectively cover the body from the neck to the ankles and wrists. One piece suits are **STRONGLY RECOMMENDED**. All suits shall bear an SFI 3.2A/1 or higher certification label or FIA 1986 Standard or FIA Standard 8856-2000 homologation label. Underwear of fire resistant material shall be used but is optional with suits carrying an FIA Standard 1986 Standard or FIA Standard 8856- 2000 label or SFI 3-2A/5 or higher (e.g., /10, /15, /20) certification label.

B. Head and Neck Protection Requirements

1. Crash helmets approved by the Snell Foundation with Snell sticker 2015 or later Special Application (SA2015), or by the SFI with a SFI Sticker 31.1a for open faced helmets and a SFI sticker 31.2a for closed faced. NOTE: Snell M rating is not allowed for Time Trial and Hillclimb events. The back of each driver's helmet should be labeled with a minimum of the driver's name. Full face helmets for all drivers are required.

   SA2020 open face helmets will be exempted until the **end of the** first full PHA season that SA2025 full face helmets are available if both of the following conditions are met:

   a. Proof of purchase (e.g. a receipt) is provided showing that the SA2020 open face helmet was purchased prior to March 5, 2022, and

   b. The car driven has a DOT approved windshield.

2. ~~The use of a head and neck support system (SFI 38.1, FIA 8858-2002 or FIA 8858-2010) is required. Head and neck support devices with expiration dates will expire on December 31st of the labeled expiration date's year.~~ **The use of a Head and Neck Restraint (H&NR) system that has been certified in accordance with SFI 38.1 or FIA 8858-2002 or 8858-2010 is required; an SFI 38.1 or FIA 8858-2002 or 8858-2010 label must be properly affixed to the device. H&NR devices do not time out irrespective of any stated expiration date, but they must be maintained in acceptable condition (e.g., no damage to the H&NR device, straps, or pads).**

3. Accident damaged helmets should be sent by the driver or his or her representative to the Snell Memorial Foundation, 3628 Madison Ave., North Highland, CA. 95660 (ph.) 916-331-5073 (attn. Edward B. Becker). Details of the accident should be included. Freon based total loss helmet cooling systems are not allowed.

C. Gloves made of leather and/or accepted fire resistant material containing no holes.

D. Socks made of accepted fire resistant material.

E. Face coverings (balaclavas) of accepted fire resistant material for drivers with beards or mustaches. Hair protruding from beneath a driver's helmet shall be completely covered by fire resistant material. As an alternative to balaclavas, a full helmet skirt of accepted fire resistant material may be used. Balaclavas are required for open face helmets. Double-layer balaclavas are **STRONGLY RECOMMENDED**. If balaclavas are used voluntarily, they shall be of accepted fire resistant material. The bottom of the face coverings should be tucked into the collar of the drivers suit.

F. Goggles or face shields (eye protection), preferably made of new impact resistant materials, for drivers of open cars~~.~~ Face shields (and a full face helmet) are required when not using a DOT-approved windshield. Eyeglasses and safety glasses do not qualify as eye protection.

Requirements:	**Open Car**		**Closed Car**	
	DOT Windshield	**Not a DOT Windshield**	**DOT Windshield**	**Not a DOT Windshield**
Full Face Helmet	Face Shield Down	Face Shield Down	Eye Protection **STRONGLY RECOMMENDED**	Face Shield Down
Open Face Helmet	Goggles	Not Allowed	Eye Protection **STRONGLY RECOMMENDED**	Not Allowed

G. A driver's restraint system meeting SUPPS Section 11 shall be used at all times while on the track.

H. Shoes, with uppers of leather and/or nonflammable material that at a minimum cover the instep. Ventilation pinholes by the manufacturer are allowed.

9.21 SCATTERSHIELDS/CHAIN GUARDS

The installation of scatter shields or explosion-proof bell housings shall be required on all cars that do not have a stock firewall/tunnel (e.g., GT, Formula, and Sports Racing classes), or where the failure of the clutch or flywheel could create a hazard to the driver. Chain drive cars shall be fitted with a protective case/shield to retain the chain in case of failure. Minimum material specifications are:

- .125 inch SAE 4130 alloy steel
- .250-inch mild steel plate
- .250-inch aluminum alloy
- NHRA or SFI approved flexible shields.

9.22 DETACHABLE PANELS/SUNROOFS

All cars with detachable hardtops, detachable panels, and detachable doors (e.g., Lotus 7) shall have the detachable items removed unless authorized in the Category Rules or Specification Book for that car to remain in place. Movable panels such as sliding sunroofs shall be closed. It is **STRONGLY RECOMMENDED** that glass sunroofs be removed as follows: All sunroofs may be replaced with panel or replacement skin of the same material as the original surrounding roof material. Note: Specification Books take precedence over SUPPS rules.

9.23 OIL CATCH TANKS, FILTERS, AND BREATHERS

It is **STRONGLY RECOMMENDED** that oil holding tanks and engine breathers, whether directly or indirectly ventilating the crankcase, and all transmission/transaxle breathers shall be equipped with oil catch tanks. For any purpose-built race car, the oil catch tank is required (e.g. any GCR class car unless otherwise specified as exempt in the current GCR). Minimum catch tank capacity shall be one U.S. quart for the engine and transmission/transaxle. Oil holding tanks and oil filters may be mounted in the driver/passenger compartment. A metal bulkhead shall prevent exposure of the driver to oil spillage. Oil catch tanks shall vent into the engine compartment or outside the driver's compartment. A crankcase vacuum breather that passes through the oil catch tank(s) to exhaust systems or vacuum devices that connect directly to exhaust systems is prohibited.

9.24 MASTER SWITCH

It is **STRONGLY RECOMMENDED** that all cars be equipped with a master switch easily accessible from outside the car. For any purpose-built race car, the master kill switch is required (e.g. – any GCR class car unless otherwise specified as exempt in the current GCR.) Spec Racer Fords shall be wired per RFSRII. The master switch shall be installed directly in either battery cable and shall cut all electrical circuits EXCEPT an on-board fire system. All terminals of the master switch shall be insulated to prevent shorting out. It shall be clearly marked by the international marking of a spark in a blue triangle and mounted in a standard location. Off position shall be clearly indicated at the master switch location. The standard locations shall be as follows:

A. FORMULA AND SPORTS RACING CARS -- In proximity to the right-hand member of the roll bar, but in a location so that it cannot be operated accidentally. It can be mounted on a bracket welded to the inside of the upright member or mounted so that the operating lever or knob is outside of the body panel immediately in-board of the upright member. This is the standard location on Formula cars built to the Constructor's Association requirements for Formula 1.

B. CLOSED SPORTS RACING CARS, PRODUCTION CARS, IMPROVED TOURING, SPEC MIATA, AND GT CARS -- In front of the windshield on either the cowl or on top of the fender, but close enough to the windshield to be accessible if the car is overturned. Alternatively, it may be mounted below the center of the rear window or on a bracket welded, clamped or bolted to the roll cage or dash, easily accessible through the open window. (Drilling of holes in roll cage to attach the bracket is prohibited.)

C. OPEN PRODUCTION, GT AND IMPROVED TOURING CARS – May exercise a choice among the above locations.

9.25 STEERING WHEEL LOCKS

It is **STRONGLY RECOMMENDED** that all cars with steering wheel lock devices have the devices removed (except Touring).

9.26 FORMULA CAR VISIBILITY

The driver of all Formula cars shall have a field of vision of not less than ninety (90) degrees to either side (total of 180 degrees) with both eyes by turning his or her head, but without lifting his or her head forward or otherwise moving from the normal driving position. Plexiglas or similar uncolored transparent material may be substituted for existing bodywork. "Token" portholes do not satisfy this requirement. Only a structural member such as a roll bar brace or frame tube may interrupt the required field of vision.

9.27 WINDOW SAFETY NETS/ ARM RESTRAINTS

Window safety nets or arm restraints are required. Arm restraints are required on all open cars. Closed cockpit cars may use either arm restraints or a driver's side window net. Arm restraints shall be worn based on the manufacturer's instructions and with the driver's wrists and hands restricted to the inside of the envelope of the bodywork and roll bar/cage.

If window nets are used, they must meet the following requirements. All window nets shall meet SFI Specification 27.1., and shall bear an "SFI Spec 27.1., Label" to that effect. The window net shall be equipped with a quick-release device. Nets shall be attached to the roll cage; plastic buckles, hose clamps and elastic cords are not permitted. Holes in the roll cage to accommodate either support rod are unacceptable unless bushed and welded completely. Refer to Figures 1 and 2, "Proper Window Net Installation," for additional information on mounting methods.

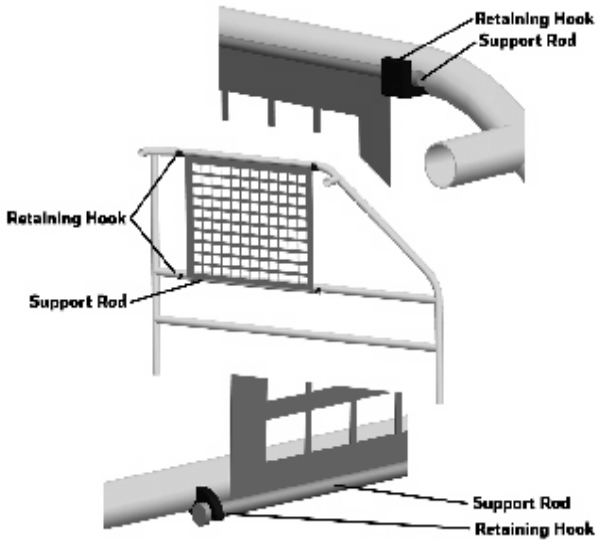

FIGURE 1

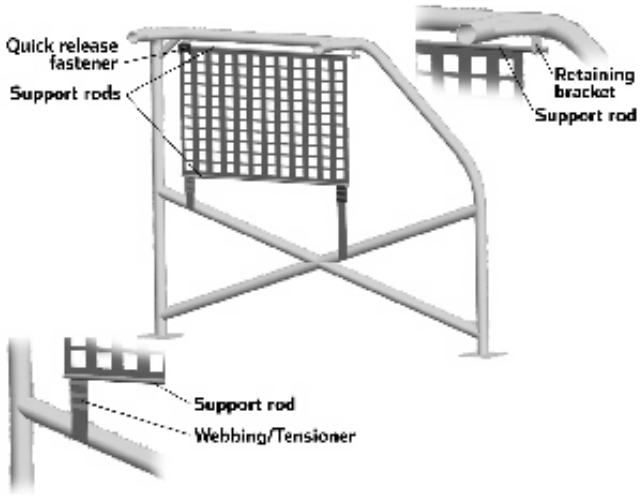

FIGURE 2

9.28 TOWING EYES

Towing eyes are **STRONGLY RECOMMENDED** on all cars. **If one is installed, it shall be of a closed design (i.e., not a hook).**

9.29 WHEEL FANS

Wheel fans are permitted, unless otherwise restricted.

9.30 WINDSHIELD CLIPS/REAR WINDOW STRAPS

It is **STRONGLY RECOMMENDED** that windshield safety clips and rear window safety straps be installed on all closed cars (except Street Prepared, street Modified, Spec Miata, Touring and Improved Touring) where OEM glass is installed. If windshields or rear windows are non-OEM glass (e.g. – Lexan, etc.) then the clip and/or straps are required.

A. Three (3) clips (3 inch x 1 inch x 1/8 inch) shall be bolted or riveted to the body at the top of the windshield.

B. Two (2) clips (3 inch x 1 inch x 1/8 inch) shall be bolted or riveted to the cowl and extend over the bottom edge of the windshield. Clips shall be spaced a minimum of twelve (12) inches apart.

C. It is **STRONGLY RECOMMENDED** that three (3) one (1) inch wide strips of steel or aluminum be installed behind the windshield to support it from collapsing inwards if it becomes damaged. The rear window shall be secured with two (2) metal straps (1-inch-wide x 1/8-inch-thick) bolted or riveted to the body at the top and bottom of the rear window.

9.31 FUEL AND OIL LINES

All fuel and oil lines, including gauge and vent lines, which pass into or through the driver/passenger compartment, shall be of steel tube, metal braided hoses or bulk headed.

9.32 DATA COLLECTION DEVICES

Data collection devices are considered to be instrumentation and therefore allowed in all classes that permit the installation, replacement or addition of gauges, indicators or instrumentation.

9.33 OIL AND OIL ADDITIVES

Any oil or oil additive may be used. Oil additives are defined as: Any liquid or particulate compound(s) delivered into the engine via the engine oil for the purpose of friction/temperature reduction, and/or metal surface conditioning (i.e., PTFE resins (Teflon, “Slick-50”), Molybdenum Disulfide, etc.).

9.34 COOLANT

The use of waterless coolants is prohibited. It is STRONGLY RECOMMENDED to not have any glycol-based coolant in any cooling system.

9.35 CRYOGENIC TREATMENT

Cryogenic treatment of components is allowed unless specifically prohibited in the category or class preparation rules.

9.36 AUTOMATIC TRANSMISSIONS AND HAND CONTROLS

Allowed for PHA Events.

9.37 CAR ELIGIBILITY

Open to all categories listed in the current GCR and the additional classes listed below. All classes shall meet the safety requirements of these Supps. These classes include:

GCR Classes

Spec Miata (SM, SMX)*	Touring (T1, T2, T3, T4, ET)
*PHA abbreviations are SMIA and SMIAX respectively	Super Touring (STU, STL)
Super Production (SPO, SPU)	Production (EP, FP, HP)
Grand Touring (GT1, GT2, GT3, GT3U, GTL, GTA, GTX)	Sedan (AS)
Improved Touring (ITA, ITB, ITC, ITR, ITS)	B-Spec and C-Spec (B-Spec, C-Spec)
Sports Racing (ASR, P, P2, PE, SRF, SRF3, SR1, SR3)	Formula (F6, FA, FC, FE, FE2, FF, FS, FST, FV, FX)

Super Production

Cars running Super Production according to the GCR Specification shall be separated by the following displacements:

SPU - normally aspirated cars under 2.5 liters prepared to the Super Production specifications in the GCR.
SPO - all cars prepared to the Super Production specifications in the current GCR which are not eligible for SPU

All rotary engine cars will apply a 1.5 displacement multiplier when determining class.

Supplemental Classes (as defined in section 9.38)

Vintage (V1, V2, V3)	Special (S1, S2, S3)
Historic (H1, H2, H3, H4)	INEX (IS, IM)
Rally (RALNA, RALFI)	Modified Electric (ME1, ME2)
FV Challenge Cup (FVCC)	Stock Electric (SE)
Solo V (SV)	Optional Formula Classes - Club Ford (CF)
Street Modified Rear Wheel Drive (SMR)	

Solo and Time Trial Derived Classes (as defined in section 9.39)

Sport Lite (**ST**~~SL~~)	Sport Unlimited (SU)
Sport (S)	Modified (M)
Super Sport (SS)	Super Modified (SM)
Sport Max (SX)	Outlaw (O)

9.38 SUPPLEMENTAL CLASSES

9.38.1 VINTAGE/HISTORIC:

Cars shall be prepared to and in possession of the SCCA Vintage Rules. A vintage or historic car will not be able to compete at full competition speed unless it conforms to the current safety/roll bar rules specific in the current GCR, TTR. If a car does not conform to these specifications, it may be allowed to take exhibition runs at the posted road speed limit with no time posted. No exhibition runs will be allowed at track events. In Historic 1, 2 and 4 carburetors and intake manifolds, valve rockers and brakes are free. Transmissions are free as long as they have the same number of forward gears. Rear tube shocks can replace lever shocks. Fender flares composed of steel, fiberglass or aluminum are allowed. No racing slicks are allowed in any of these classes.

The following Vintage and Historic classes will be offered:

- Vintage 1 (V1) – 1950-1962 Sports Cars and Sedans 2000cc and under
- Vintage 2 (V2) – 1950-1962 Sports Cars and Sedans Over 2000cc
- Vintage 3 (V3) – 1950-Pre 1967 Sports Racing and Formula Cars
- Historic 1 (H1) – 1963-Pre 1973 Sports Cars and Sedans 1301cc to 2000cc
- Historic 2 (H2) – 1963-Pre 1973 Sports Cars and Sedans Over 2000cc
- Historic 3 (H3) – 1967-Pre 1973 Sports Racing, FIA, Can-Am and 1967-Pre1973 Formula Car, All Formula 5000
- Historic 4 (H4) – 1963-Pre 1973 Sports Cars and Sedans 1300cc and under

9.38.2 RALLY

There will be two classes: Forced Induction with a 34mm restrictor plate (RALFI) and Naturally Aspirated (RALNA). All cars must meet the classing and safety requirements and possess a current rule book from one of the following series:

- NRS (NASA Rally Sport)
- CARS (Canadian Association of Rally Sport)
- ARA (American Rally Association)

9.38.3 SPECIAL CLASSES

Automobiles that are of a design and construction not covered in these SUPPS may be placed in one of three classes based on engine displacement (multiplication factor of 1.5 shall be used for forced induction):

S1 – 0 to 1650cc

S2 – 1651 to 3500cc

S3 – 3501cc to 500 cubic in

All cars competing in this category shall conform to the following specifications:

A. Meet the safety requirements as outlined in sections 9 and 10 of these SUPPS.

B. Have operating suspension on all wheels.

C. The chassis must be equally distributed along the centerline of the car.

D. The body style may be open or closed wheel.

E. Cars with original factory body panels removed and Kit cars (example, Miata Karts, Vette Karts, Goblin, Exocet and similar builds) are required to have a minimum of 2 bars incorporated in the roll cage in the door area on both sides of the car. The uppermost bar shall land in the area between the driver's shoulder and above the elbow.

   Where no doors or body panels exist, cars are required to have panels securely fastened to the body or roll cage from the floor or sill up to the uppermost bar on both sides of the vehicle. Panels shall be constructed of .035"steel, .060" aluminum, or composite material consistent with the existing body panels.

   Any gaps shall be kept as small as possible to prevent debris from entering the cockpit area.

   As of 3/10/2024, cars that have already competed and have been approved by PHA or SCCA sanctioned hillclimbs within the last five years may continue as they were but must comply with all other regulations as outlined in these supps. All cars are **STRONGLY ENCOURAGED** to follow the above guidelines.

9.38.4 INEX CLASSES (IS & IM)

There shall be two INEX-based classes:

IS (INEX Spec) – This class shall be open to all 600 Racing produced cars recognized as INEX or Legends cars (including but not limited to Legends, Bandoleros, and Thunder Roadsters), and shall conform to all current INEX rules, including tire specifications.

IM (INEX Mod) – This class shall be open to any car originally manufactured by 600 Racing that has been modified within the limitations below. These modifications are allowed in excess of any current INEX rules. Any car modified in any way other than, or in excess of, the limitations below shall not be eligible for this class. If a modification is not specifically mentioned in the INEX rules or below, it is prohibited.

Engine/Drivetrain- The original engine block and cylinder head must be retained. Crankshaft may be replaced, so long as stroke remains stock. Any fasteners may be used. No material may be added to any engine part to facilitate any allowed modification. Engine "tamper seals" need not be present. Parts may be lightened and/or balanced. Connecting rods and pistons may be replaced. Blocks may be bored within the limits of the block. Cylinders may not be re-sleeved except to repair to the original bore. Any oil pan may be used, but dry-sump systems are prohibited. Camshafts are free. Cylinder heads may be ported. Any ferrous valve may be used. Other valve train components are free.

The original intake manifolds must be retained but may be ported. Carburetors may be replaced by similar units (one venturi feeding each individual cylinder), with no larger than 40mm chokes (venturis). Tuning parts (jets, etc.) may be changed for tuning purposes. The carburetor must be attached to the manifold in the stock configuration.

Clutches may use the aluminum basket "road race" allowance according to INEX rules.

Rear gear ratios, axle shafts, and differentials are free, but must fit within the stock, unmodified rear axle housing.

Exhaust must remain stock, except that coatings may be applied to exhaust components.

Any automotive-type ignition system may be used. Rev limits may be changed or removed.

Suspension- Dampers (shocks) and springs may be replaced but must utilize original mounting points. Sway bars (anti-roll bars) may be added, removed, or replaced. Ride height must be a minimum of three (3) inches (measured to the bottom of the frame rail) as raced, with driver.

Any tire may be used. Wheels may be replaced with those that have a diameter and effective width that is the same as stock.

9.38.5 FORMULA V CHALLENG CUP (FVCC)

All cars in this class must comply with the rules for the Formula V Challenge Cup Series.

9.38.6 SOLO V

Car preparation must meet the Solo V specifications set forth in the SCCA Solo regulations (see Modified Category, class C). Both car and driver must meet the safety requirements outlined in these SUPPs.

9.38.7 OPTIONAL FORMULA CLASSES (Club Ford - CF)

All cars in these classes must comply with the Formula Category Rules in the GCR.

9.38.8 STREET MODIFIED REAR WHEEL DRIVE (SMR)

Car preparation must meet the Street Modified specifications set forth in the SCCA Solo Regulations. Both car and driver must meet the safety requirements outlined in these SUPPs. In addition, the car must meet the following specifications:

- Rear Wheel Drive
- Originally equipped with a minimum of four seats and four factory seatbelts

9.38.9 MODIFIED ELECTRIC (ME1 & ME2)

This class is for electric cars made for, or modified for, racing.

A. Electric specific racing classes: ME-2: Up to and including 200kw (~268 bhp), ME-1: Over 200kw.

B. The vehicle must be totally powered by battery power; no other fuel may be used.

C. All batteries must be fully contained in enclosures that may be sealed by race tech officials.

D. A forced battery ventilation system must be fitted and must be rated at least 10 cfm. Not required if thermally stable batteries, such as Lithium Ferrous Phosphate (LiFePO4) are fitted.

E. Material Safety Data Sheets or Safety Data Sheets must be available upon request by safety and tech officials.

F. Any electric cables in the system must be sized to safely carry the current from the batteries without overheating.

G. Any conductor or non-insulated area that is exposed must be properly insulated and labeled as high voltage with proper warning signs.

H. A fuse, not a circuit breaker, must be in series with the main power source and cannot exceed 200 % of the expected battery draw at full load of system.

I. Vehicle must have a master disconnect switch that will completely disconnect the vehicle from the power source.

J. This switch must be clearly marked for both on and off positions.

K. This switch must be accessible by the driver and safety personnel from outside the vehicle.

L. There are no restrictions on vehicle weight.

M. These vehicles may have custom made frames and bodies.

N. All frames must be of good quality design and fabrication.

O. The driver of the vehicle shall be seated between the front and rear axles.

P. All flywheels must be covered with an NHRA approved scatter shield/blanket and labeled with proper SFI label or equivalent as specified in section 9.21 of these Supps.

Q. The driver must be shielded from any other rotating parts.

R. This class requires roll cage as specified in section 10 of these Supps.

9.38.10 STOCK ELECTRIC (SE)

This class is for production electric vehicles, and they must be run as manufactured with the exception of the safety requirements listed below.

A. No hybrid vehicles will be allowed. Vehicles must operate totally on electricity; no other fuel may be used.

B. No modification to the vehicle is allowed except for the safety changes listed below.

C. All flywheels must be covered with an NHRA approved scatter shield/blanket and labeled with proper SFI label or equivalent as specified in section 9.21 of these Supps.

D. The driver must be shielded from any other rotating parts.

E. This class requires a minimum of a roll bar as specified in section 10 of these Supps.

9.39 SOLO AND TIME TRIAL DERIVED CLASSES

These classes are mainly for SCCA Solo or TT classed cars, although some production based GCR class cars are also eligible. With the exception of Outlaw, all cars must fall into one of their respective classes within the SCCA Solo, GCR, or TT rules to be eligible for these classes.

Outlaw is for closed wheel production based or production silhouette based cars that prepared beyond the limits of the Sport and Modified categories.

All safety will be per these PHA supps.

Tires: Any DOT approved tire unless otherwise noted

NOTE: Cars with the majority of the original factory body panels removed and Kit cars (example, Miata Karts, Vette Karts, Goblin, Exocet and similar builds) are excluded from all Sport classes and will run one class up from their normal classing. Ex: Modified to Super Modified; Super Modified to Outlaw; Outlaw to Special.

9.39.1 SPORT LITE (~~SL~~**ST**)

Small displacement, lightly modified street legal and limited prep race. (No forced induction)

Eligible classes:

Solo – **CSP,** FSP
GCR – ITB, **ITC,** B-SPEC, TOURING 5
TT – TUNER 5, S5, S6

Aero: Splitters and spoilers as per Solo Street Prepared rules

9.39.2 SPORT (S)

Small displacement, lightly modified street legal and limited prep race.

Displacement: Up to 2.5L NA, no forced induction.

Eligible classes:

Solo – ~~CSP,~~ **C Street, D Street, E Street, H Street, SST, CST, DST,** DSP, ESP
GCR – ITA, ~~ITC,~~ Touring 4, Spec Miata
TT – S4, T4
Club Spec X
Any class eligible for Sport Lite

Aero: Splitters and spoilers as per Solo Street Prepared rules

9.39.3 SUPER SPORT (SS)

High Performance, lightly modified street legal and limited prep race.

Displacement: Up to **4.9L** ~~4.5L~~ NA, 2.5L forced induction (2WD), 1.9L forced induction (AWD)

Eligible classes:

Solo – **A Street, B Street, F Street, BST, GST,** DSP, ESP
GCR – Touring 3, ITS, ITR
TT – ~~S2,~~ S3, T2, T3, ~~M4,~~ M5
Club Spec M
Any class eligible for Sport

Aero: Splitters and spoilers as per Solo Street Prepared rules

9.39.4 SPORT MAX (SX)

High Performance modified street legal and limited prep race.

Displacement: Up to **6.3L** ~~6.0L~~ NA, 3.0L forced induction (2WD), no AWD

Eligible classes:

Solo – ~~SSP,~~ SMF, ESP ~~(ESP Up to 6.4L)~~
GCR – ~~TOURING 1,~~ Touring 2
TT – ~~S1, T1,~~ M3, M4.
Any class eligible for Super Sport

Aero: Splitters and spoilers as per Time Trials Max or Solo Street Mod category.

9.39.5 SPORT UNLIMITED (SU)

Highly modified street legal and limited prep race.

Displacement: Unlimited

Eligible classes:

Solo – SM, SSM, SSP, ESP ~~(ESP over 6.4L)~~
GCR – **Touring 1**
TT – ~~M1, M2,~~ **S1, S2, T1**
PHA – SMR
Any class eligible for Super Max

Aero: Splitters and spoilers as per Time Trials Max or Solo Street Mod category.

9.39.6 MODIFIED (M)

Small displacement NA with high levels of modifications. Alternate body panels and removal of road going equipment are allowed. Swapping and building of engines is allowed. Modifications to the frame or unibody are allowed.

Vehicles must have either a hood or a windshield.

Displacement: Up to 2.5L NA. No forced induction.

Eligible Classes:

Solo – D Prepared, E Prepared, F Prepared, X Prepared
GCR – GT3, GTL, STL, E Production, F Production, H Production
TT – U2
Any class eligible for Sport

Tires: Any tire is allowed

Aero: Open (must be fixed, no active aero)

9.39.7 SUPER MODIFIED (SM)

Same as Modified but for larger displacement or smaller displacement forced induction. Hood or fender exit exhaust is allowed.

Must have either a windshield or hood.

Displacement Up to 5.7L or 3.0L forced induction.

Eligible Classes:

Solo – C Prepared (no displacement limit)
GCR – **STU,** GT2, American Sedan
TT – M1, M2, U1
Any class eligible for Modified

Tires: Any tire allowed.

Aero: For C Prepared derived classes, as per Solo Prepared category. For all other derived classes: Open (Must be fixed, no active aero)

9.39.8 OUTLAW (O)

Outlaw is for production-based cars that live outside the rules - the ultimate builder's class. So long as the Course Marshals or Classing Committee can correctly guess what kind of car it is… or is trying to be, within "close enough" range - it is eligible for Outlaw. These are the fastest "door cars" and tube frame racers on the hill, pushing every limit of power, aero and design.

~~This class is for the fastest door cars.~~ All cars ~~(closed wheel)~~ must be production based or have a production silhouette based body and must be recognizable. **Vehicles must have either a windshield or a hood.**

Displacement: unlimited

Eligible Classes:

N/A – Vehicles are not required to fall into any specific class, as long as they satisfy all criteria detailed in this section.

~~**GCR** – SPO, GT1~~
~~**PHA** – SMX (Note this class is discontinued in 2025)~~
~~Any class where the car is modified beyond the class rules~~

Tires: Any tire allowed

Aero: Open (Must be fixed, no active aero)

10. ROLL BAR / CAGE

Roll cages are **STRONGLY RECOMMENDED** in all automobiles; however specific roll structure requirements depend on the car class. In any case, participants should strive to prepare their car to the highest level of safety that is feasible, and the following sections are set as the MINIMUM roll structure requirements for each level. It is strongly suggested that competitors consider which Level they may wish to compete in the future before constructing their roll structures to simplify future upgrades.

For the purposes of this section a roll bar is defined as a main hoop, placed behind the driver, supplemented by two braces. A roll cage is defined as a main roll hoop with at least 4 additional mounting points including aft braces and either a front halo with down tubes or a high or low front hoop with diagonals connecting to the main hoop.

The Technical Staff of Club Racing shall have the responsibility to ensure specification compliance with SCCA safety standards. To that end, the Technical Staff of Club Racing may or may not accept alternate construction standards from any source that significantly vary from SCCA standards of protection.

10.1 PHA EVENTS (Time Trial and Hillclimb)

Roll cages (as specified in the GCR) are required for the following classes: Grand Touring (GT), Improved Touring (IT), Super Touring, Touring 1 (T1), Production, American Sedan, Specials, Super Production, all Formula classes, all Sports Racer classes, Rally, Outlaw (O), and Modified Electric vehicles**.** In these vehicles, the roll cage structure must meet current GCR requirements for the specific class.

If the vehicle does not fall into a Club Racing class, the cage should be prepared to the GCR equivalent or greater. For example, a tube-frame Special car should be compared to a GT class cage, while a street-driven car that ends up in Special because of odd modifications or that requires a roll cage could be comparable to a Production or IT cage.

~~For the Sport Max (SX), Sport Unlimited (SU), Modified (M), Super Modified (SM) and SMR classes, a roll cage is required for any car that has an engine block that is not sourced from a car of the same manufacturer if there is a change in the number of cylinders or if there is a change from Normally Aspirated (NA) to Forced Induction (FI). Otherwise, the car must have a minimum of a roll bar that meets the description in this section of the SUPPS.~~

Note: Vette / Miata Kart and similar type builds require a GT category cage.

10.1.1 BREAKOUT TIMES

Break-out times shall be used to require full cages per 10.1 in cars not currently required to have them.

Break-out times in seconds:
Weatherly.....56
Pagoda.....85
Giants.....46
Polish.....58
Duryea.....120

Driver and car combinations that get a time that is less than the breakout time (they broke out) at any Hillclimb event shall be required to have a roll cage for all Hillclimb events in the following seasons. Track events are exempted. Break-out times will be reviewed every year.

10.1.2 CARS WITH NON-MANUFACTURER ENGINE SWAPS

For all vehicles with an engine block that is not from the same manufacturer as the car, a roll cage is required if one or more of the following conditions is met:

1. **The engine increases the number of cylinders. Ex: 4 cylinders to 6 or 8.**
2. **Forced induction is added.**

Otherwise, the car must have a minimum of a roll bar that meets the description in this section of the SUPPS.

10.1.3 VINTAGE AND HISTORIC CLASSES

If a car is running in a Vintage or Historic class and prepared to those specifications, it may run only a roll bar if no cage was used at the time the car was originally raced. This applies to all the cars with cage requirements, including Formulas (cars) and Sports Racers. Competitors are encouraged to use full roll cages if at all possible.

The purpose of this tolerance is to allow for original race cars to be raced in original form (or as close as possible) without devaluing the vehicle by installing a full roll cage. This shall NOT be interpreted to apply to kit cars, special constructions, replicas, or any car that has been significantly modified from its condition as originally raced. Vintage and Historic cars may upgrade to current tires, batteries, incidental items, and other unavailable items to return the car to racing condition.

10.1.4 CLASSES NOT OTHERWISE LISTED

All other classes at PHA events are required to have a minimum of a roll bar that meets the description in this section of the SUPPS.

10.2 BASIC DESIGN CONSIDERATIONS

A. The basic purpose of the roll bar is to protect the driver if the car turns over or is involved in a serious accident. This purpose should not be forgotten.

B. The top of the roll bar must be a minimum of two (2) inches above the driver's helmet when the driver is sitting in a normal driving position (as near the roof as possible on closed sedans) and shall not be more than six (6) inches behind the driver. In case of two driver cars, both drivers must be within the roll bar height requirement, however only one driver must be within six inches of the roll bar.

C. The roll bar must be designed to withstand compression forces resulting from the weight of the car coming down on the roll structure, and to take fore-and-aft loads resulting from the car skidding along the ground on the roll structure.

D. The two (2) vertical members forming the sides of the hoop shall not be less than fifteen (15) inches apart (inside dimension). It is **STRONGLY RECOMMENDED** that the roll bar extend the full width of the cockpit to provide maximum bearing area in all soil conditions during rollovers. The roll bar vertical members on formula cars and other single seat cars with a center driver position must be not less than fifteen inches apart, inside dimension, at their attachment points to the uppermost main chassis member.

E. An inspection hole of at least 3/16-inch diameter must be drilled in a non-critical area of a roll bar member to facilitate verification of wall thickness. This should be at least three inches from any weld or bend.

F. It is **STRONGLY RECOMMENDED** that steel gusset plates be used at all welds. Gussets should be at least two inches long on each leg and 3/16 inches thick.

G. It is **STRONGLY RECOMMENDED** that roll bars be coated only with a light coat of paint. If, however, a roll bar should be chrome-plated, it is **STRONGLY RECOMMENDED** that the structure be normalized.

H. Post or tripod types of roll bars are not acceptable.

I. No portion of the safety roll bar shall have an aerodynamic effect by creating a vertical thrust.

J. Roll cage or chassis design shall prevent engine intrusion into the driver compartment.

10.3 MATERIAL

A. The roll bar hoop and all braces must be of seamless or DOM mild steel tubing (SAE 1010, 1020, 1025) or equivalent, or alloy steel tubing (SAE 4130). ERW is not permitted. Docal R8 is also considered an acceptable material (tube sizing and wall thickness requirements are as per SAE 4130).

B. The size of tubing to be used shall be determined based on the weight of the car. The following minimum sizes are required and are based upon the weight of the car without the driver.

Vehicle Weight	Tubing Size (min.) Outside diameter x wall thickness (in.)
Under 1,500 lbs.	1.250 x 0.090 1.375 x 0.080
1,501 – 2,699 lbs.	1.500 x 0.095 1.750 x 0.095 1.625 x 0.080
2,700 lbs. and up	1.500 x 0.120 1.750 x 0.095 2.000 x 0.080

Dimensions are nominal. 0.005" (0.127 mm) variation in wall thickness is allowed.

C. All cars utilizing a roll cage, including Formula cars and Sports Racers, refer to the current GCR for rules concerning materials, specifications and design.

10.4 FABRICATION

A. One continuous length of tubing must be used for the roll bar hoop member with smooth continuous bends and no evidence of crimping or wall failure.

B. All welding must be of the roll bar hoop be such that the minimum outside width measured at a point four (4) inches below the uppermost point is twelve (12) inches. Whenever possible the roll bar hoop should start from the floor of the car and, in the case of tube frame construction, be attached to the chassis tubes by means of gussets or sheet metal webs in order to distribute the loads.

C. Welding shall conform to American Welding Society D1.1:2002, Structural Welding Code, Steel Chapter 10, Tubular Structures. Whenever D1.1 refers to "the Engineer" this shall be interpreted to be the owner of the vehicle. Welds shall be continuous around the entire tubular structure.

D. All welds shall be visually inspected and shall be acceptable if the following conditions are satisfied:

1. The weld shall have no cracks.
2. Thorough fusion shall exist between weld metal and base metal.
3. All craters shall be filled to the cross section of the weld.
4. Undercut shall be no more than 0.01 inch deep.

E. Aluminum bronze or silicon bronze welding technique is permitted, but extreme care shall be used in preparation of parts before bronze welding and in the design of the attaching joint.

10.5 BRACING

A. Roll bar hoops must have two (2) fore/aft braces with tubing of dimensions at least equal to that required for the main hoop itself. Diagonal lateral bracing of equal dimension tubing must be installed to prevent lateral distortion of the hoop. (In most cases, a lateral brace from the bottom corner of the hoop on the side to the top corner of the hoop on the other side is sufficient). The following alternatives are permitted. Although installing the diagonal lateral brace in the main hoop is the strongest (and hence most preferable) alternative, there may be instances where such an installation is not practical. In such situations, the installation of the diagonal brace as shown in Figure 3 will be acceptable.

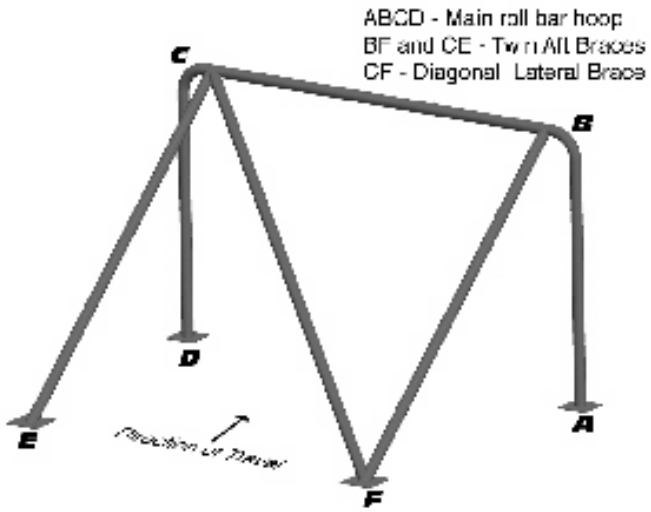

FIGURE 3

B. The bracing must be attached as near as possible to the top of hoop, but not more than six (6) inches below the top of the hoop, and at an included angle of at least thirty (30) degrees. If a single brace is used, it must be attached at the top of the main hoop.

C. If the fore/aft bracing must be removable, the connection between the roll bar hoop and the brace rod must be of the double- lug type fabricated from material at least 3/16-inch-thick and welded through a double or gusset arrangement to avoid distortion or excessive strains caused by welding. It is **STRONGLY RECOMMENDED**-that the fore/aft brace be attached to a chassis member through a double-lug connection.

D. For the Mazda Miata, a “V” design, also known as a “double diagonal” used between the fore/aft braces is acceptable.

10.6 MOUNTING PLATES

A. Roll bars and braces must be attached to the frame of the car wherever possible. Mounting plates may be used for this purpose where desired.

B. In the case of cars with unitized or frameless construction, or cars with frames where frameless mounting of the roll bar is impractical, mounting plates must be used to secure the roll bar structure to the floor of the car. The important consideration is that the load be distributed over as large an area as possible. A backup plate of equal size and thickness must be used on the opposite side of the panel with the plates through-bolted together.

C. Mounting plates bolted to the structure shall not be less than .1875 (3/16) inch thick and the use of a back-up plate of equal size and thickness on the opposite side of the panel with the plates through-bolted together is **STRONGLY RECOMMENDED**. A minimum of 3 bolts per plate is required for bolted mounting plates. Mounting plates welded to the structure shall not be less than .080 inch thick. Whenever possible the mounting plate should extend onto a vertical section of the structure such as a door pillar.

10.7 REMOVABLE ROLL BARS

Removable roll bars and braces must be very carefully designed and constructed to be at least as strong as a permanent installation. If one (1) tube fits inside another tube to facilitate removal, the removable portion must fit tightly and must bottom on the permanent mounting, and at least two (2) bolts must be used to secure each such joint. The telescope section must be at least eight (8) inches in length.

10.8 INSTALLATION ON CARS OF SPACE FRAME AND FRAMELESS DESIGN

A. It is important that roll bar structures be attached to cars in such a way as to spread the loads over a wide area. It is not sufficient to simply attach the roll bar to a single tube or junction of tubes. The roll bar must be designed in such a way as to be an extension of the frame itself, not simply an attachment to the frame. Considerable care must be used to add as necessary to the frame structure itself in such a way as to properly distribute the loads. It is not true that a roll bar can only be as strong as any single tube in the frame.

B. On cars of frameless construction, consideration should be given to using a vertical roll bar hoop of 360 degrees completely around the inside of the car and attached with suitable mounting plates. This type of roll bar then becomes a substitute for the frame.

10.9 OTHER ROLL BAR DESIGNS (ACCEPTABLE FOR CARS BUILT PRIOR TO 1/1/79)

Roll bars of alternative material or design may be accepted by the Technical and Safety Inspector upon presentation of data verifying the installation is able to withstand three (3) simultaneously applied loads: 1.5 G Lateral; 5.5 G Fore or aft; 7.5 G Vertical. The induced loads being carried over into the primary structure.

Royal Automobile Club (RAC) certification of alternative designs is acceptable for automobiles registered prior to January 1, 1979.

10.10 ROLL BAR PADDING

Braces and portions of the main hoop subject to contact by the driver’s or passenger’s helmet, as seated normally and restrained by seatbelt and harness, must be padded with a non-resilient material such as Ethafoam(R) or Ensolite(R) or other similar material with a minimum thickness of one-half inch. Padding meeting SFI spec 45.1 or FIA 8857-2001 is **STRONGLY RECOMMENDED.**

11. DRIVER RESTRAINTS

All drivers participating in PHA Time Trial or Hillclimb events shall utilize either a five, six or seven-point restraint harness meeting the specifications.

A seven-point restraint harness is **STRONGLY RECOMMENDED** for all events. Arm restraints are required on all open cars including open Targa tops, sunroofs and T-tops. The restraint system installation is subject to approval of the Chief Technical and Safety Inspector.

11.1 RESTRAINT REQUIREMENTS

A. A five-point system, for use in automobiles where the driver is seated in an upright position, consists of a nominal two (2) or three (3) inch seat belt, an approximately three (3) inch strap over the shoulder type of shoulder harness, and an approximately two (2) inch anti-submarine strap. A Five-point harness is considered a minimum restraint system. Six or seven-point systems are **STRONGLY RECOMMENDED** in all cars including automobiles where the driver is seated in an upright position.

B. A six or seven-point system, **STRONGLY RECOMMENDED** for use in all automobiles, consists of a nominal two (2) or three (3) inch seat belt, approximately a three (3) inch strap over the shoulder type of shoulder harness, and two approximately two (2) inch leg or anti- submarine straps. The seven-point system also has an approximately two (2) inch anti-submarine strap.

C. Certified nominal 2-inch shoulder harnesses are allowed when a head and neck restraint system meeting SFI 38.1 or FIA 8858 is used by the driver. Should the driver, at any time not utilize the head and neck restraint system, then 3-inch shoulder harnesses are required.

D. The material of all straps shall be Nylon or Dacron polyester and in new or perfect condition. The buckles shall be of metal to metal quick release type except in the case of leg straps of the six-point or seven-point systems where they attach to the seat belt or shoulder harness straps.

E. The shoulder harness shall be the over the shoulder type. There shall be a single release common to the seat belt and shoulder harness. When mounting belts and harnesses it is **STRONGLY RECOMMENDED** that they be kept as short as reasonably possible to minimize stretch when loaded in an incident. The shoulder harness shall be mounted behind the driver and supported above a line drawn downward from the shoulder point at an angle of twenty (20) degrees with the horizontal. The seat itself, or anything added only to the seat shall not be considered a suitable guide. Guides must be a part of the roll cage or a part of the car structure. Only separate shoulder straps are permitted. (“Y” type shoulder straps are not allowed.) “H” type configuration is allowed.

F. The single anti-submarine strap of the five-point system shall be attached to the floor structure and have a metal to metal connection with the single release common to the seat belt and shoulder harness.

G. The double leg straps of the six point or seven-point system may be attached to the floor as above for the five-point system or be attached to the seat belt so that the driver sits on them, passing them up between his or her legs and attaching either to the single release common to the seat belt and shoulder harness or attaching to the shoulder harness straps. It is also permissible for the leg straps to be secured at a point common to the seat belt attachment to the structure, passing under the driver and up between his or her legs to the seat belt release or shoulder harness straps. All straps shall be free to run through intermediate loops or clamps/buckles.

H. Each seat (lap) and shoulder belt of the harness (5, 6, or 7 points) shall have an individual mounting point (i.e., 2 for seat belt and 2 for shoulder belt minimum). Six or seven-point system antisubmarine straps may share a mounting point with one or both seat (lap) belt(s). The minimum acceptable bolts used in the mounting of all belts and harnesses are SAE Grade 5. Where possible, seat belt, shoulder harness, and anti-submarine strap(s) should be mounted to the roll structure or frame of the car. Where this is not possible, large diameter mounting washers or equivalent should be used to spread the load. Bolting through aluminum floor panels, etc., is not acceptable.

I. All driver restraint systems shall meet one of the following: SFI specification 16.1 or 16.5, FIA specifications 8853/98, 8853/2016 or 8854/98 (per GCR 9.3.18.E.).

   1. Restraint systems meeting SFI 16.1 or 16.5 shall bear a dated SFI Spec label. The certification indicated by this label shall expire on December 31st of the 5th year after the date of manufacture as indicated by the label. If for example the manufacture date is 2014 the fifth year after the date of manufacture is 2019. SFI labels, with expiration dates, expire on December 31st of the labeled expiration date’s year.
   2. Restraint systems homologated to FIA specification 8853/98 and 8854/98 will have a label containing the type of harness designation (‘C-###.T/98 or D-###.T/98) and date of expiration which is the last day of the year marked. All straps in this FIA restraint system will have these labels.
   3. If a restraint system has more than one type of certification label, the label with the latest expiration may be used.

J. Harness Threading: Assemble in accordance with manufacturer’s instructions.